KU LEUVEN

B-KUL-Z55337
Applied Thermodynamics

Sylvain Quoilin

Adapted from: Y.A. Cengel, M. A. Boles, Thermodynamics – An Engineering Approach (5th Edition)

Chapter 10

Refrigeration Cycles

(NB: this corresponds to the Chapter 11 of the reference book)

Introduction

- Chaleur is not transferred spontaneously from a cold source to a hot source

=> A refrigeration machine is needed

- The most common refrigeration cycle is the vapor compression cycle. The working fluid is called refrigerant.
- There alternative refrigeration cycles: gas, absorption, adsorption. There are also absorption machines exploiting the thermoelectric effect.

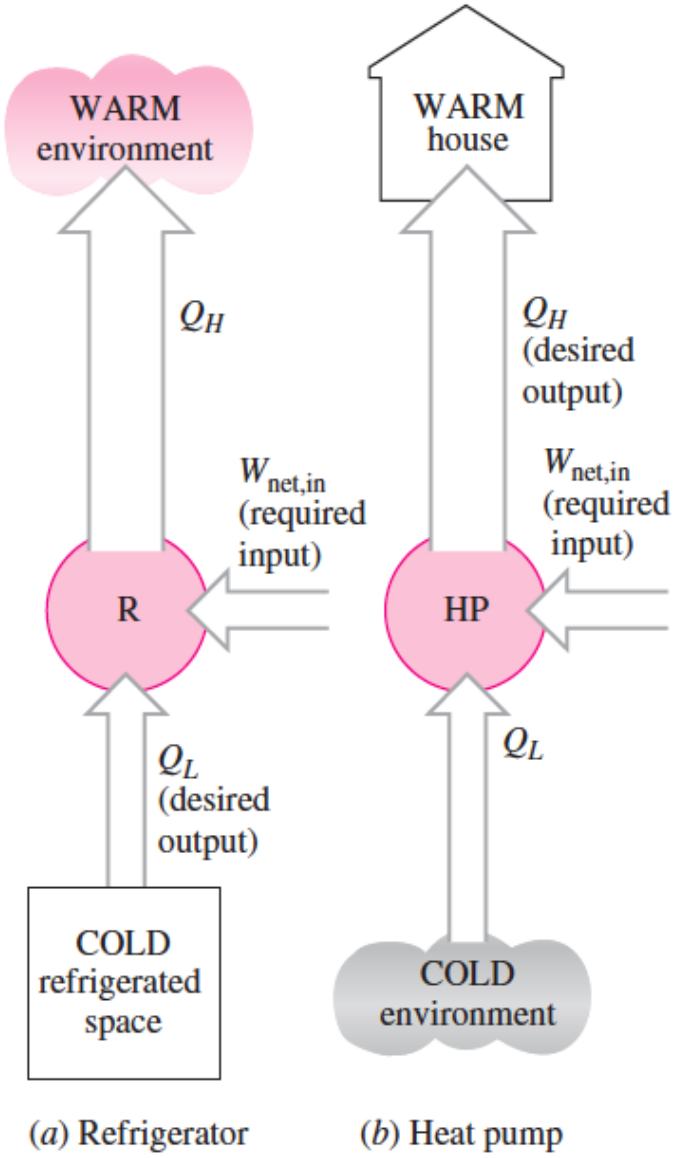

d'après Y.A. Cengel, M. A. Boles, et M. Lacroix Thermodynamique Une approche pragmatique

KU LEUVEN

Introduction

- The Coefficient of Performance (COP) is defined by:

Refrigeration machine:

$$COP_R = \frac{Q_L}{W_{net,in}} \; et \; COP_{HP} = \frac{Q_H}{W_{net,in}}$$

Heat pump:

$$COP_{HP} = COP_R + 1$$

- In heat pump mode, and without ambient heat losses (from the cycle components), COPHP is always superior or equal to one. In the case of an equality, the heat pump can be assimilated to an electrical heating device.

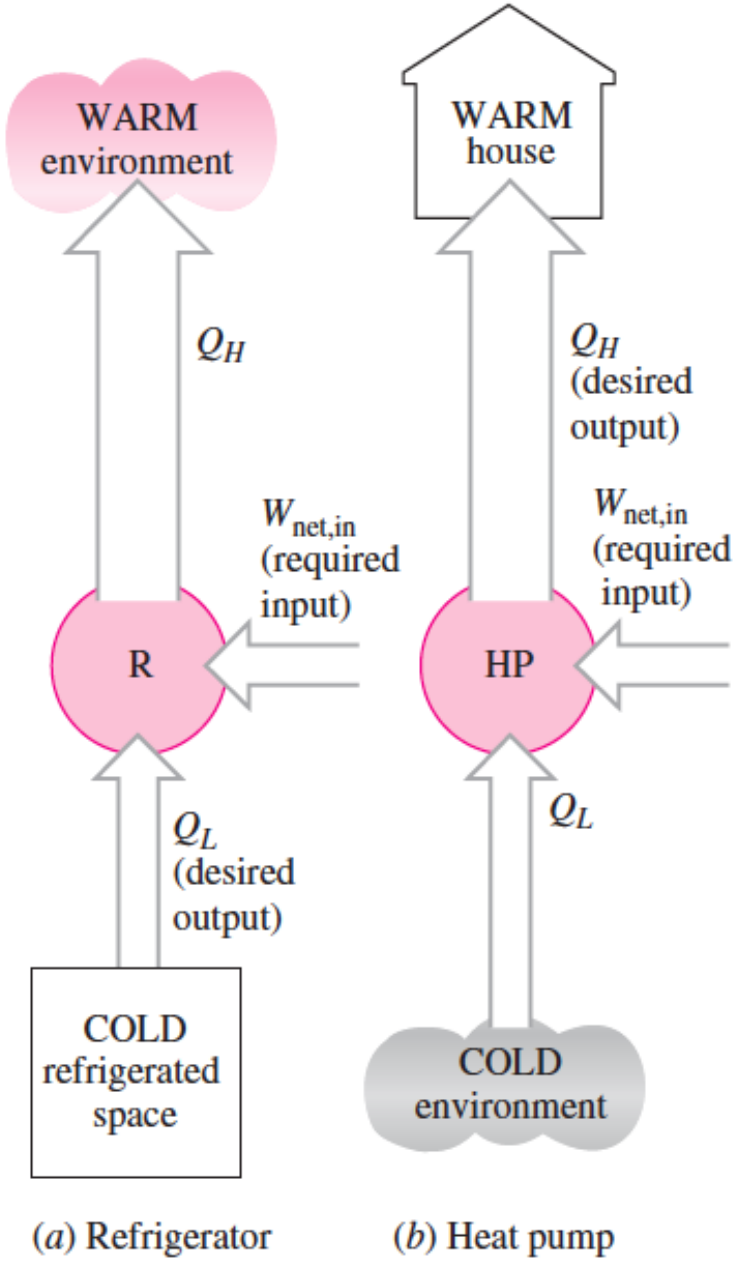

d'après Y.A. Cengel, M. A. Boles, et M. Lacroix Thermodynamique Une approche pragmatique

KU LEUVEN

The reversed Carnot cycle

- The Carnot cycle is an externally reversible cycle with 2 isothermal processes and 2 isentropic processes
- It is the highest efficiency cycle operating between two heat reservoirs at a given temperature
- Since it is reversible, all the processes can be reversed (inversion of the heat flow direction).
- We obtain the reversed Carnot cycle, which is refrigeration machine

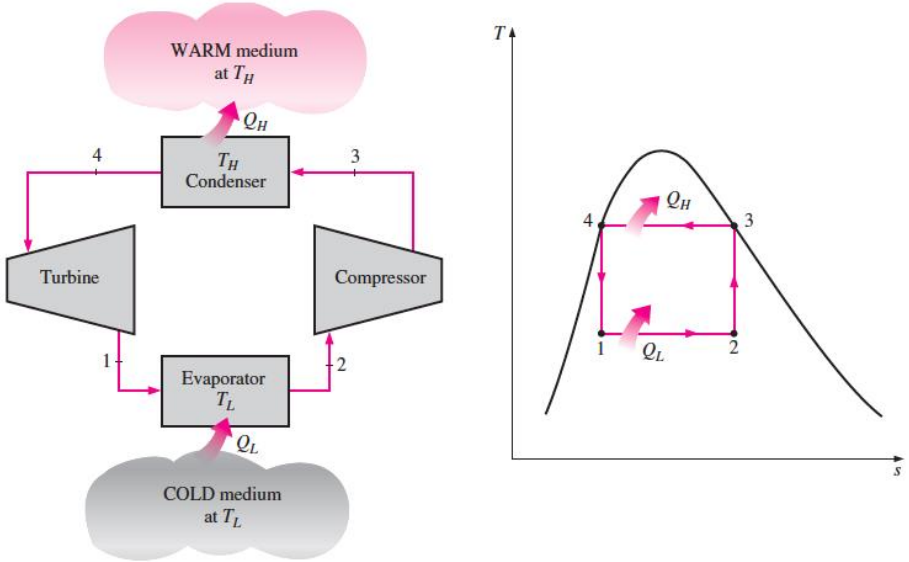

$$COP_{R,Carnot} = \frac{T_L}{T_H - T_L} \text{ and } COP_{HP,Carnot} = \frac{T_H}{T_H - T_L}$$

d'après Y.A. Cengel, M. A. Boles, et M. Lacroix Thermodynamique Une approche pragmatique

KU LEUVEN

The reversed Carnot cycle

- The reversed Carnot cycle is the refrigeration cycle with the highest performance (COP)
- However, it is hard to realize in practice: it would imply using a two-phase fluid which should be compressed and expanded isentropically.
- If the expansion and the compression are performed outside the two-phase zone, the heat transfer processes cannot be isothermal anymore

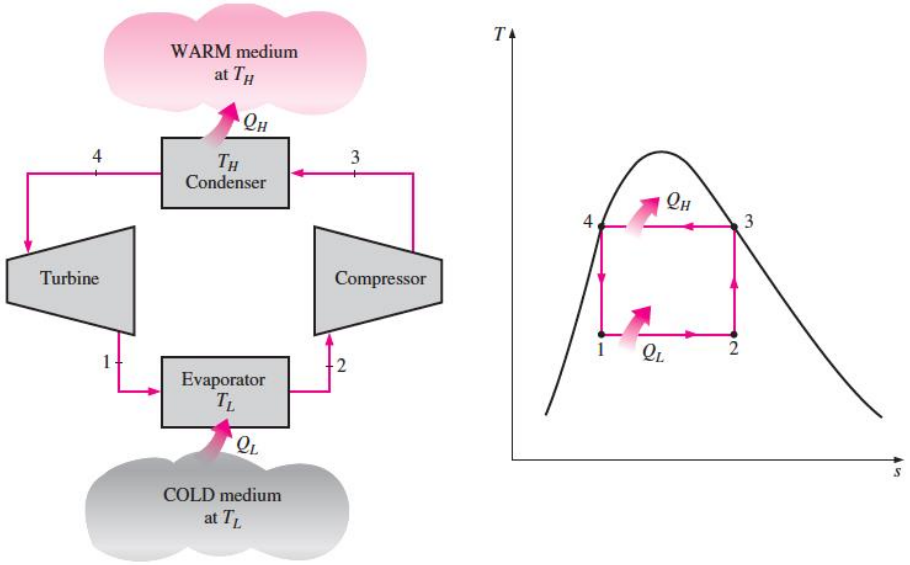

d'après Y.A. Cengel, M. A. Boles, et M. Lacroix Thermodynamique Une approche pragmatique

KU LEUVEN

The ideal refrigeration cycle

The technical difficulties of the reversed Carnot cycle can be overcome by compressing in vapor phase and by replacing the turbine by an expansion valve.

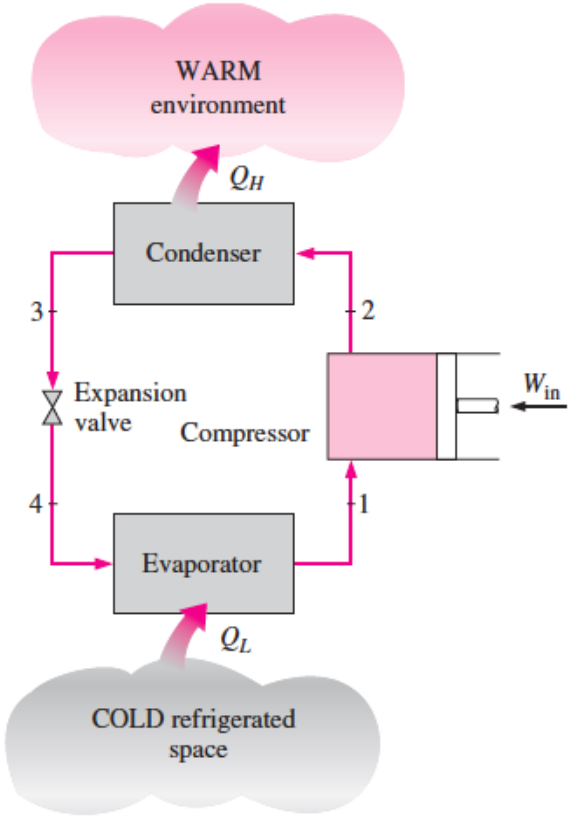

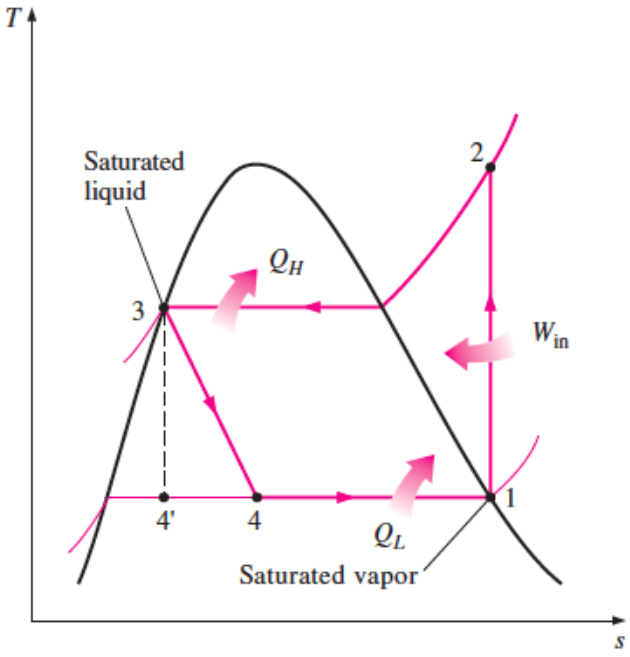

The ideal refrigeration cycle comprises the following processes:

1-2: Isentropic compression in a compressor

2-3: heat rejection at constant pressure in a condenser

3-4: Expansion in an expansion (or throttling valve

4-1: heat addition at constant pressure in an evaporator

d'après Y.A. Cengel, M. A. Boles, et M. Lacroix Thermodynamique Une approche pragmatique

The ideal refrigeration cycle

- Another common diagram is the p-h diagram. IN this diagram cooling and heating power are proportional to lines 4-1 and 2-3
- By applying the first law of thermodynamics (steady-flow, now work in the heat exchangers, adiabatic compression and expansion), we have:

$$COP_R = \frac{q_L}{w_{net,in}} = \frac{h_1 - h_4}{h_2 - h_1}$$

$$COP_{HP} = \frac{q_H}{w_{net,in}} = \frac{h_2 - h_3}{h_2 - h_1}$$

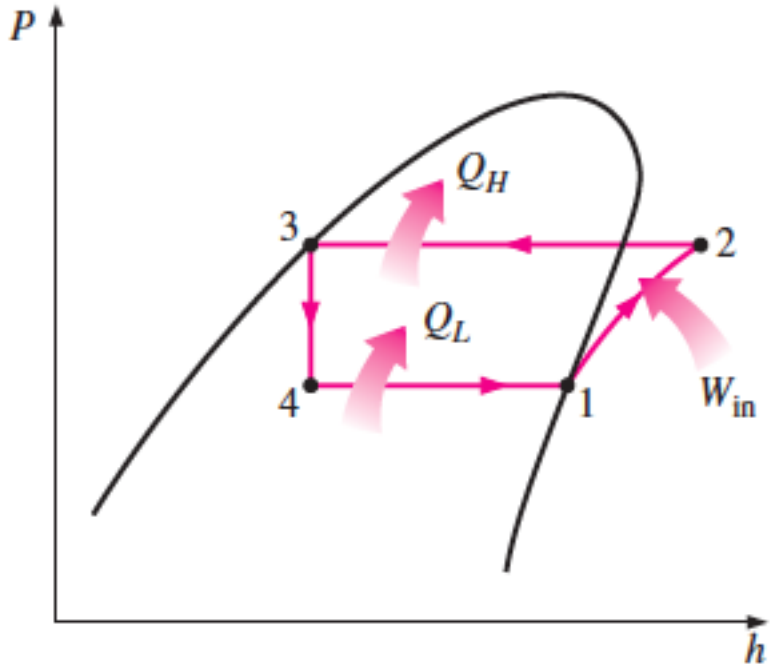

d'après Y.A. Cengel, M. A. Boles, et M. Lacroix Thermodynamique Une approche pragmatique

KU LEUVEN

The ideal refrigeration cycle

- <u>Example 11-1:</u>

A refrigerator uses refrigerant-134a as the working fluid and operates on an ideal vapor-compression refrigeration cycle between 0.14 and 0.8 MPa. If the mass flow rate of the refrigerant is 0.05 kg/s, determine (*a*) the rate of heat removal from the refrigerated space and the power input to the compressor, (*b*) the rate of heat rejection to the environment, and (*c*) the COP of the refrigerator.

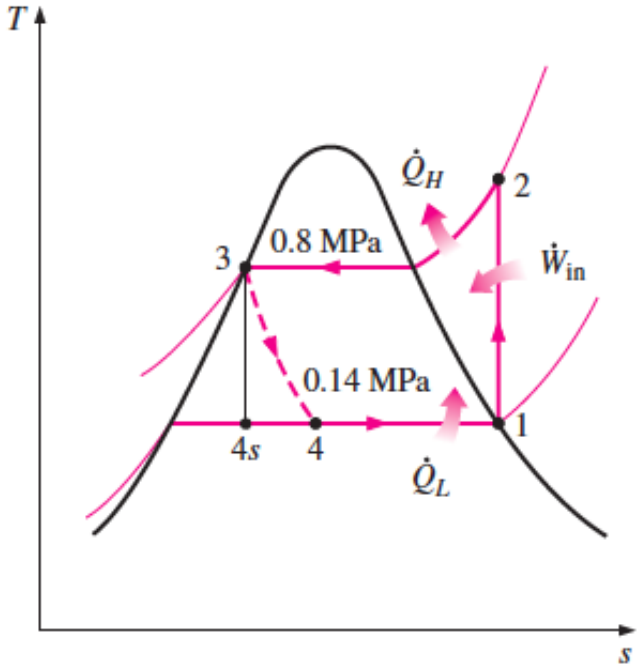

d'après Y.A. Cengel, M. A. Boles, et M. Lacroix Thermodynamique Une approche pragmatique

KU LEUVEN

The actual refrigeration cycle

The actual (or real) refrigeration cycle differs from the dieal one because of various sources of irreversibilities:

- Pressure drops (linked to friction) in the heat exchangers
- Heat transfer from the system to the surroundings
- Irreversibilities during the compression

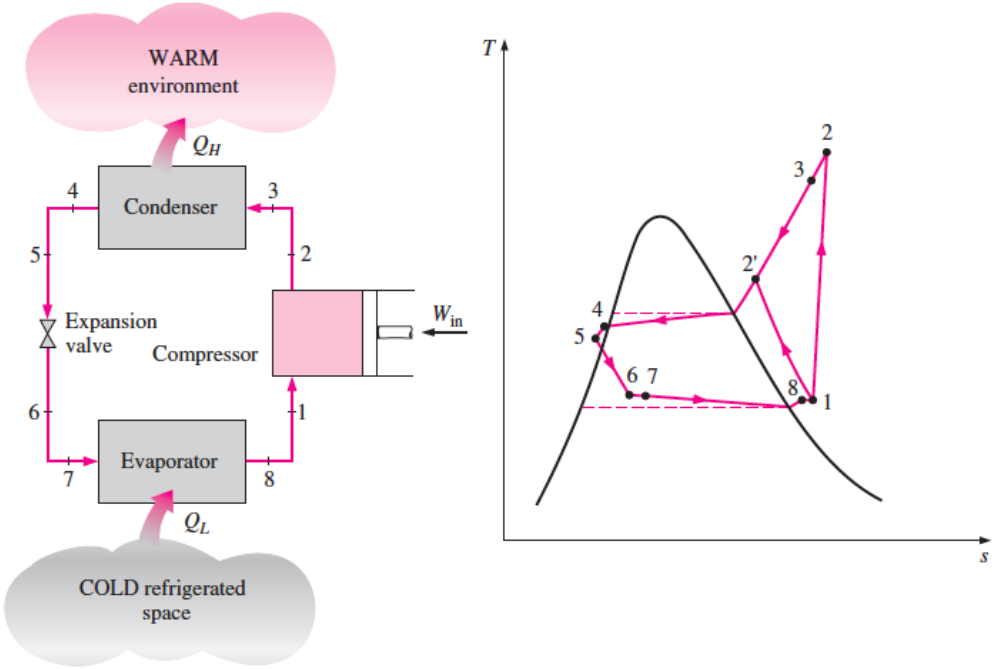

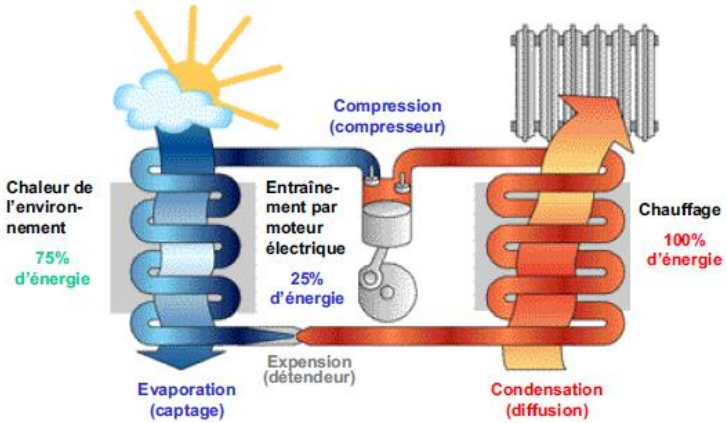

d'après Y.A. Cengel, M. A. Boles, et M. Lacroix Thermodynamique Une approche pragmatique

KU LEUVEN

The actual refrigeration cycle

Differences between the ideal and the actual cycle:

- The working fluid exists the evaporator in a state of superheated vapor (instead of saturated). This superheating is controller by the thermostatic expansion valve.
- Pressure drop and heat transfer between the evaporator and the compressor increase the specific volume at the inlet of the compressor.
- The compression is not reversible and not adiabatic. This can increase or decrease the entropy from point 1 to point 2
- In some systems, the refrigerant enters the expansion valve in sub-cooled state instead of saturated liquid

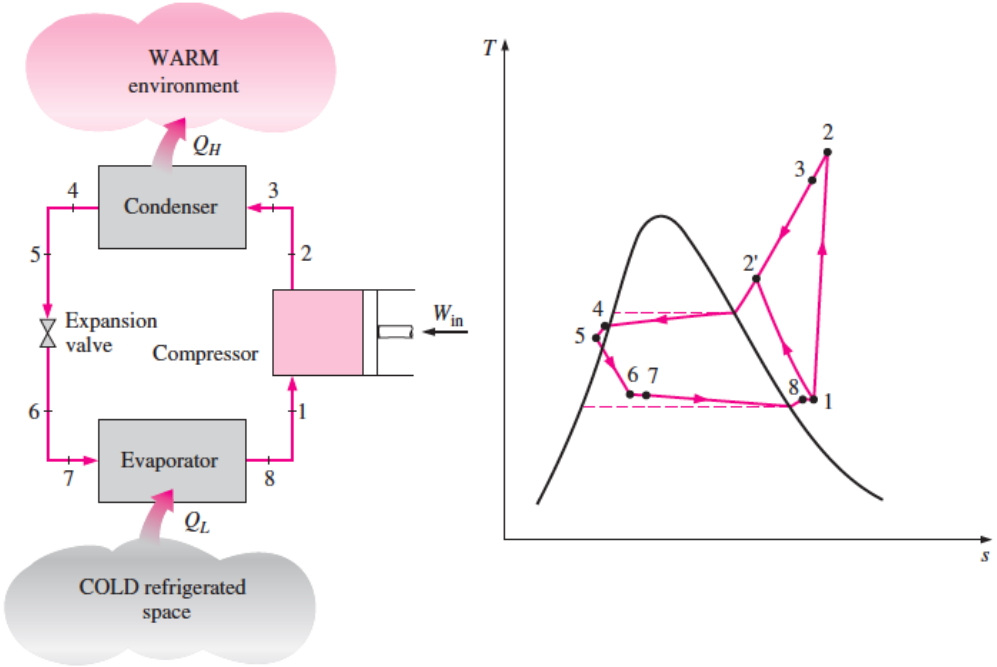

d'après Y.A. Cengel, M. A. Boles, et M. Lacroix Thermodynamique Une approche pragmatique

KU LEUVEN

The actual refrigeration cycle

- Example 11-2

Refrigerant-134a enters the compressor of a refrigerator as superheated vapor at 0.14 MPa and 10°C at a rate of 0.05 kg/s and leaves at 0.8 MPa and 50°C. The refrigerant is cooled in the condenser to 26°C and 0.72 MPa and is throttled to 0.15 MPa. Disregarding any heat transfer and pressure drops in the connecting lines between the components, determine (*a*) the rate of heat removal from the refrigerated space and the power input to the compressor, (*b*) the isentropic efficiency of the compressor, and (*c*) the coefficient of performance of the refrigerator.

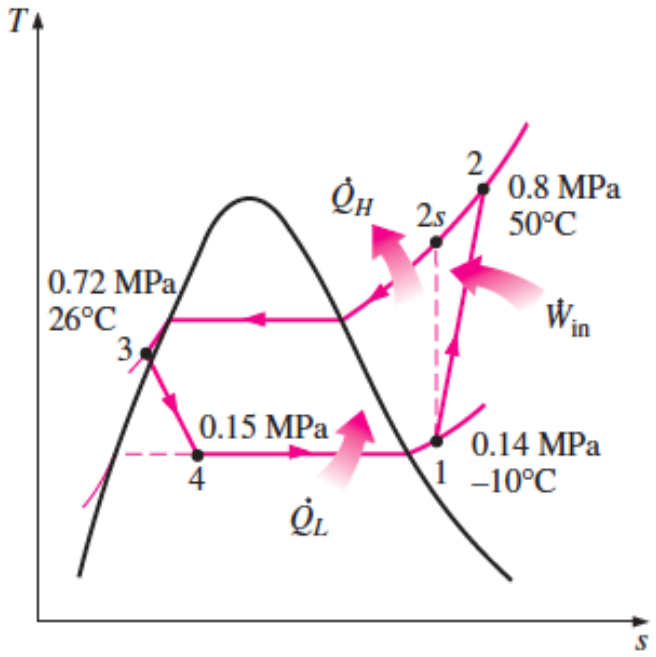

d'après Y.A. Cengel, M. A. Boles, et M. Lacroix Thermodynamique Une approche pragmatique

KU LEUVEN

Components of refrigeration cycles

Scroll compressors

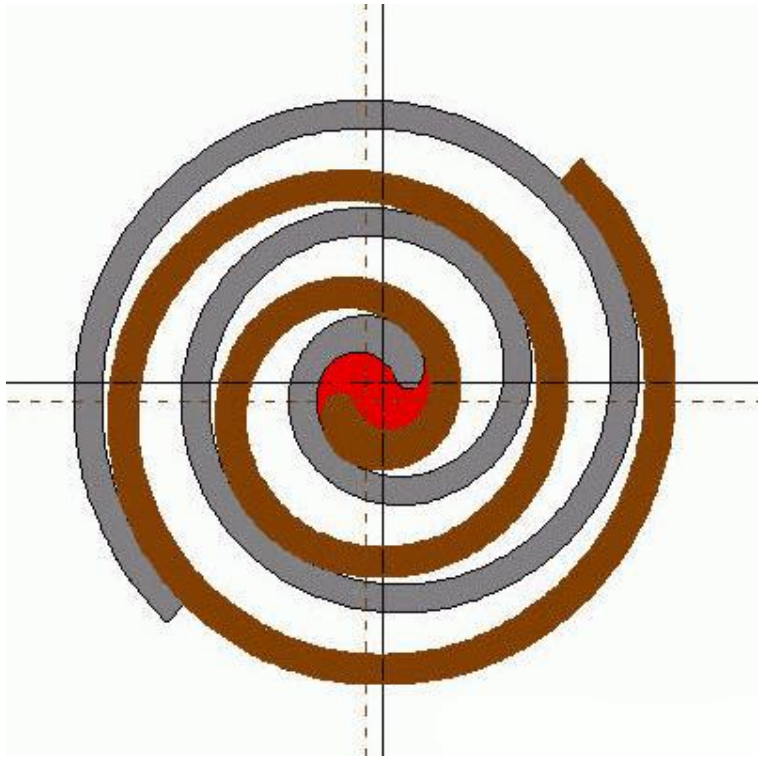

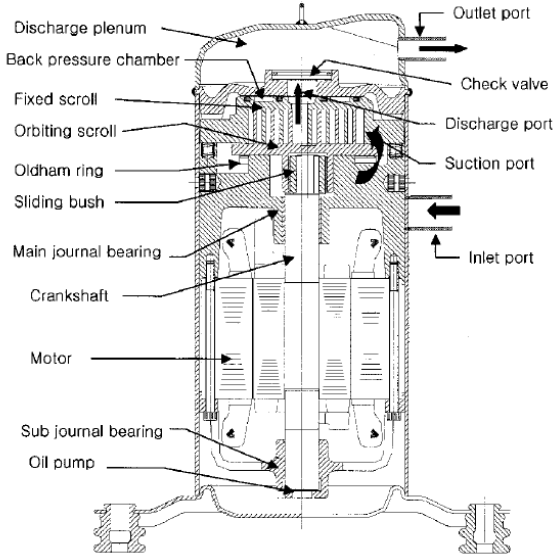

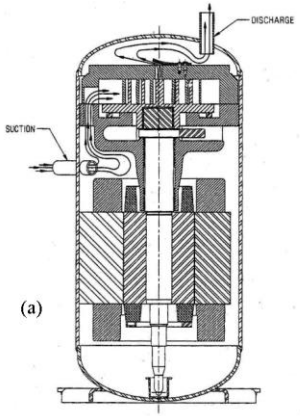

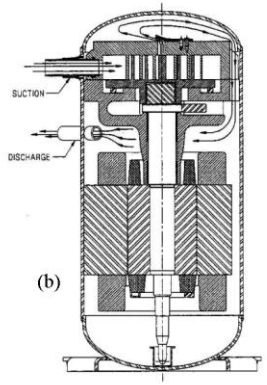

Components of refrigeration cycles

Rolling piston compressor

- The rolling piston compressor is the most common one in low-capacity refrigeration systems

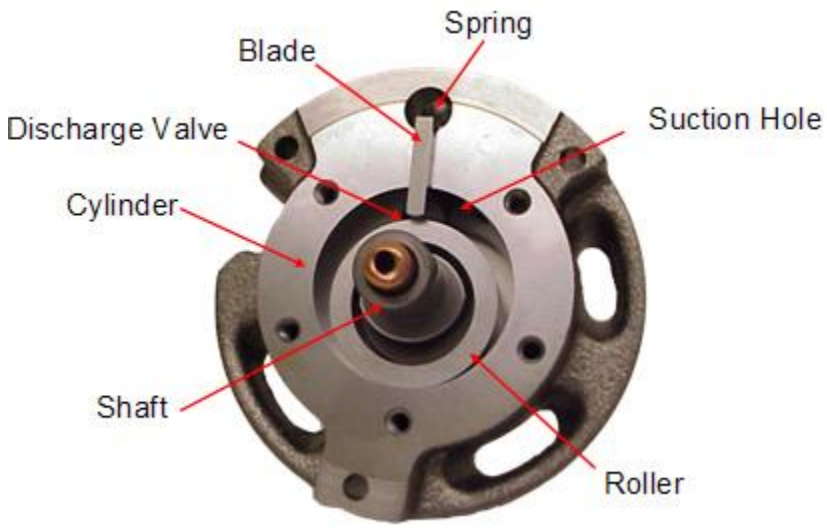

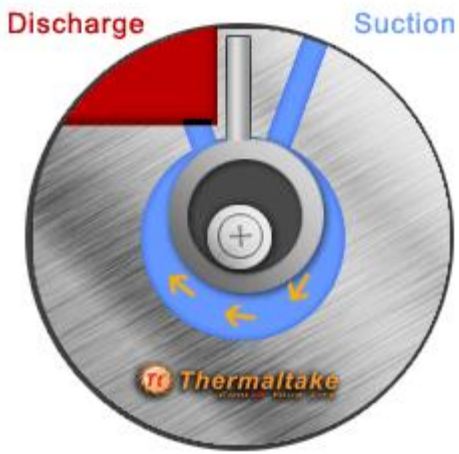

Components of refrigeration cycles

The twin-screw compressor

- Two screws
- Lubricated or dry
- In refrigeration => usually 50% oil in mass + separator

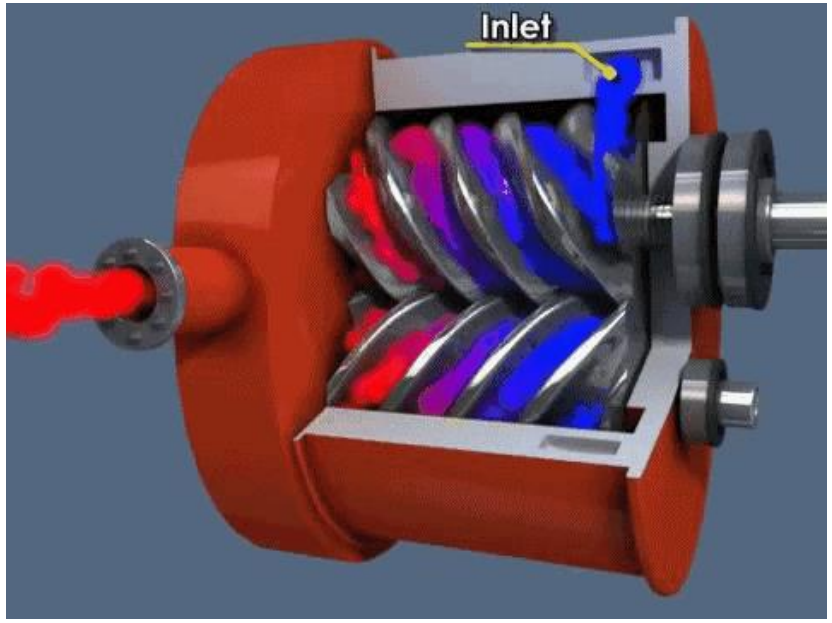

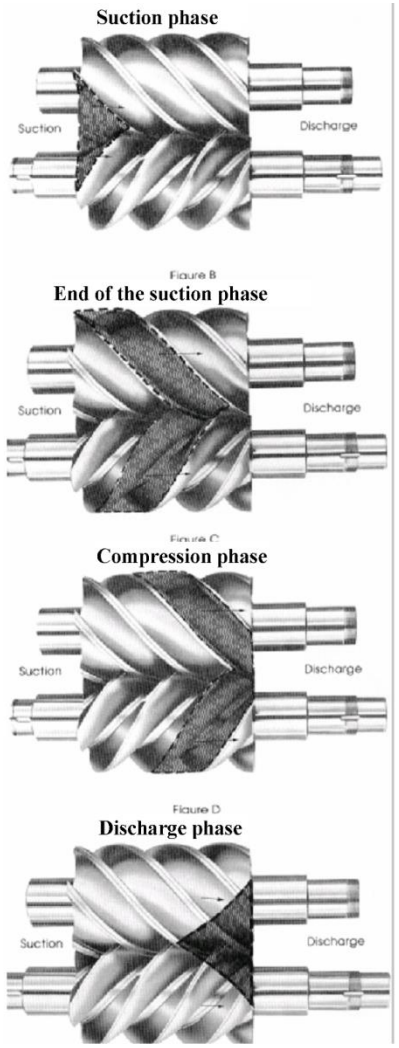

Components in refrigeration cycles

Reciprocating compressors

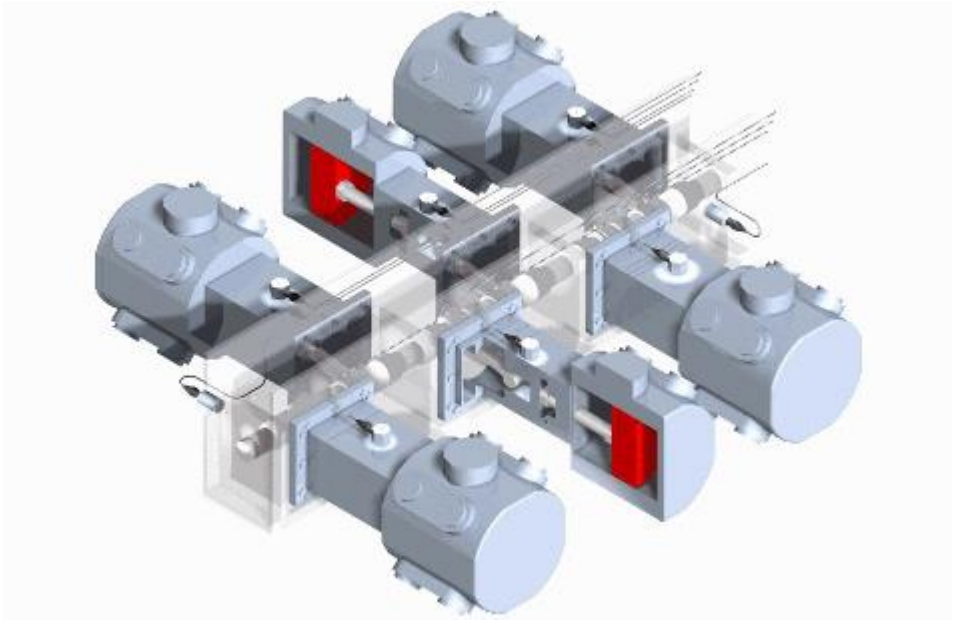

Components in refrigeration cycles

Centrifugal compressors

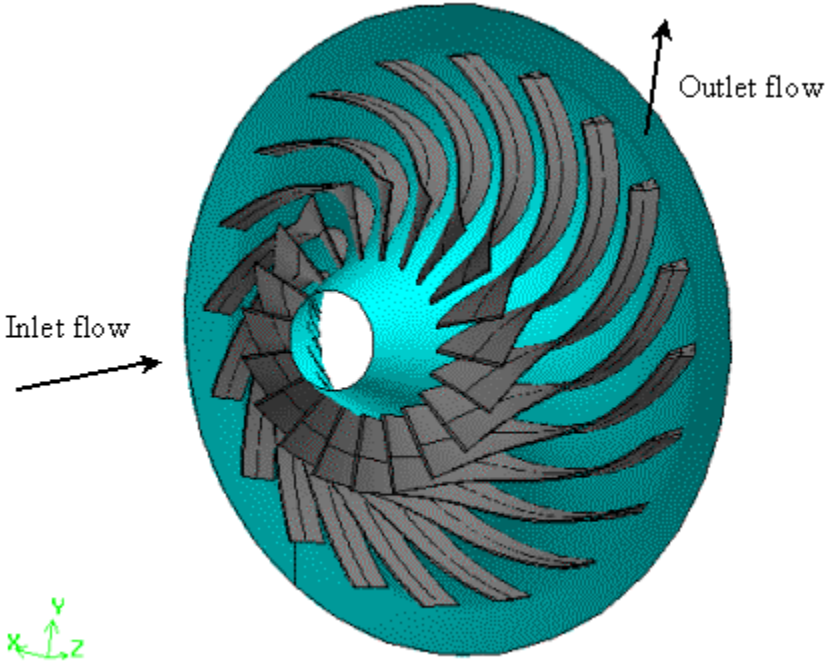

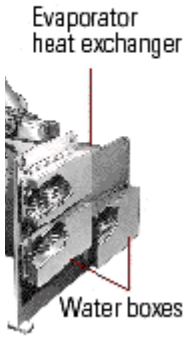

Components in refrigeration cycles

Optimal operating range of compressors

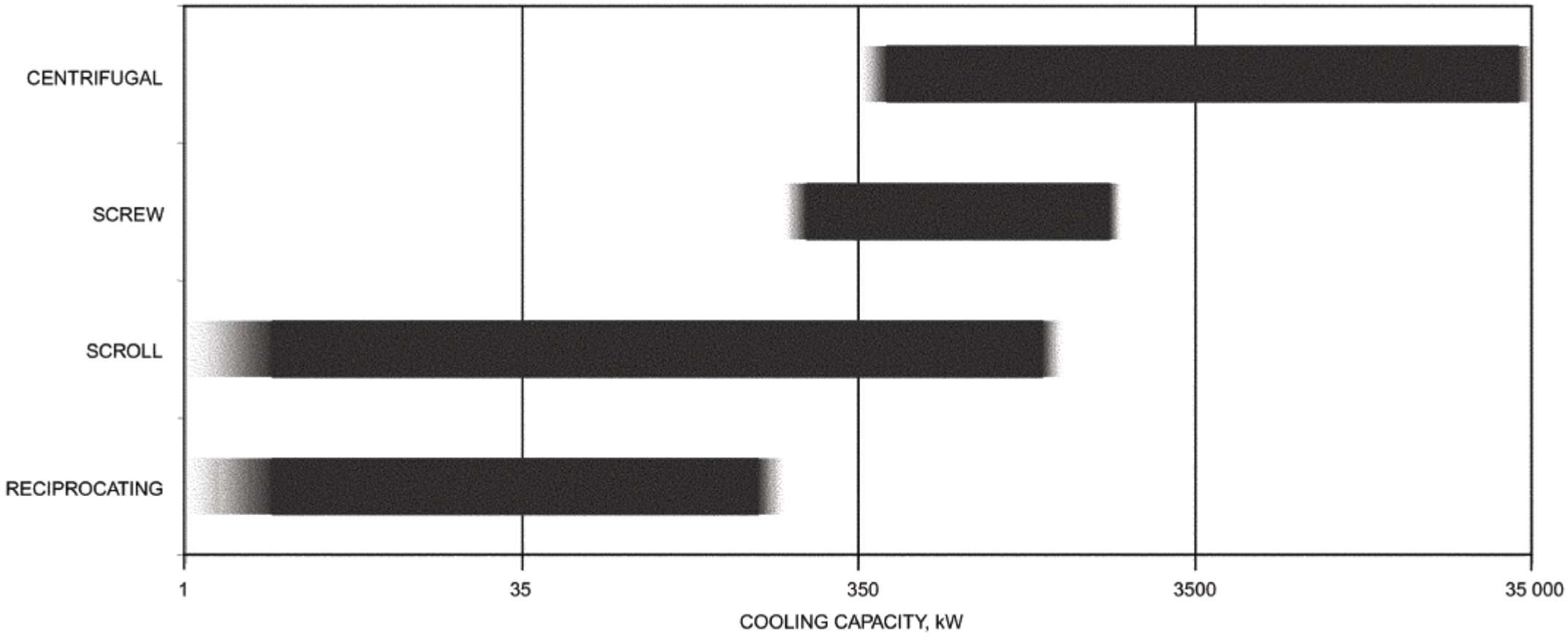

Components in refrigeration cycles

Capillary tube expansion devices

- Constant geometrical parameters (diameter, length)
- Length: 1-6m, diameter: 0.5-3 mm
- The pressure drop is cause by friction and by the acceleration of the refrigerant
- Mainly used in small-scale refrigeration systems (< 10 kW)
- Can only be used is the operating conditions are relatively stable

www.hisupplier.com

Components of refrigeration cycles

Thermostatic expansion valves

- Regulation of the refrigerant flow rate and of the superheating
- Sub-components:
  - Calibrated orifice
  - Pin
  - Spring
  - Diaphragm
  - Bulb + capillary tube
- The bulb is installed at the outlet of the evaporator to measure the superheating.

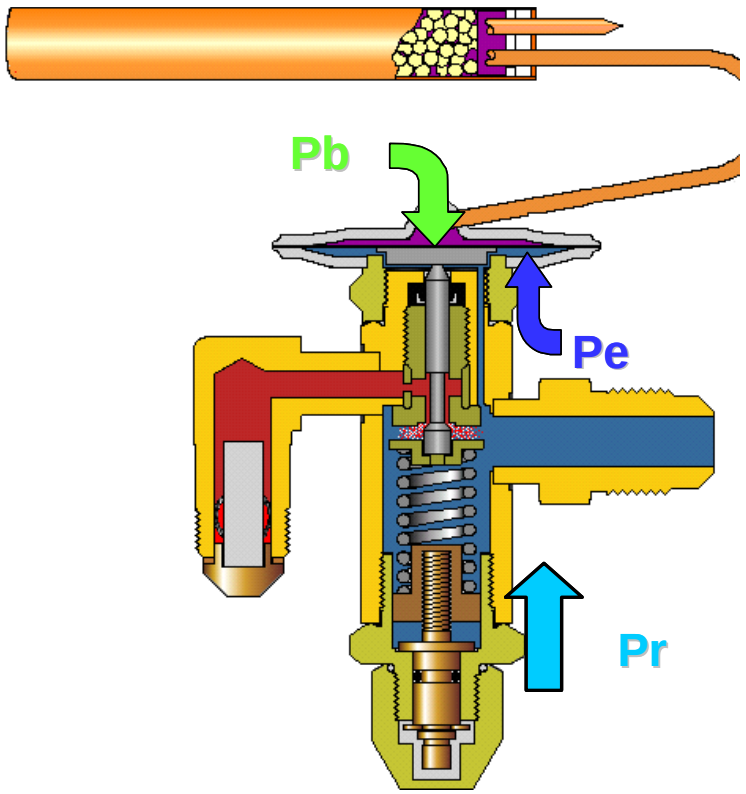

Performance

$$COP = \frac{\dot{Q}_L \text{ ou } \dot{Q}_H}{\dot{W}_{net,in}} \frac{[\text{kW}]}{[\text{kW}]} = h_{II} \times COP_{carnot}$$

= <u>Technical limit</u>
= component performance
$\Rightarrow$ design
$\Rightarrow$ regulation

$$COP_{R,carnot} = \frac{T_L}{T_H - T_L}$$

$$COP_{HP,carnot} = \frac{T_H}{T_H - T_L}$$

<u>Thermodynamic limit</u>
The Carnot COP is the maximum thermodynamic performance

Performance

Example performance curve

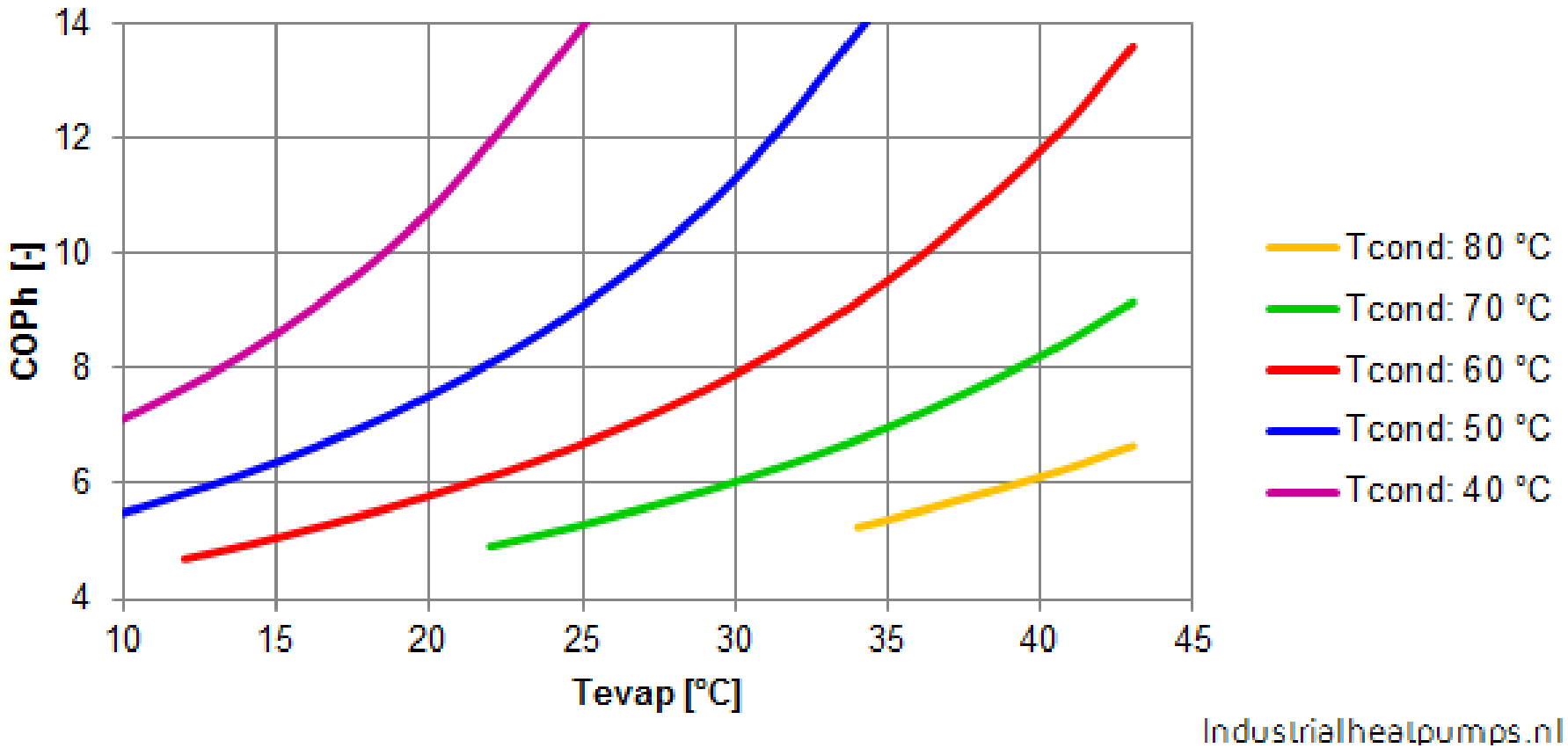

KU LEUVEN

Modeling refrigeration cycles

- Superheating: $T_{su,cp} = Tsat(fluid,p_{ev}) + \Delta T_{sh}$
- Compressor: $$\varepsilon_{comp} = \frac{h_{2s} - h_1}{h_2 - h_1}$$
- Sub-cooling: $T_{su,valve} = Tsat(fluid,p_{cd}) + \Delta T_{sc}$
- Valve: $h_{su,valve} = h_{ex,valve}$
- Heat exchangers: pinch point, LMTD, ε-NTU
- Working fluid flow rate: $$e_v = \frac{\dot{V}_r}{\dot{V}_{r,th}}$$

Example refrigeration machines

Heat pump

- Glycol water – water
- For residential applications
- 8 kW_{th}
- COP_n = 5.7

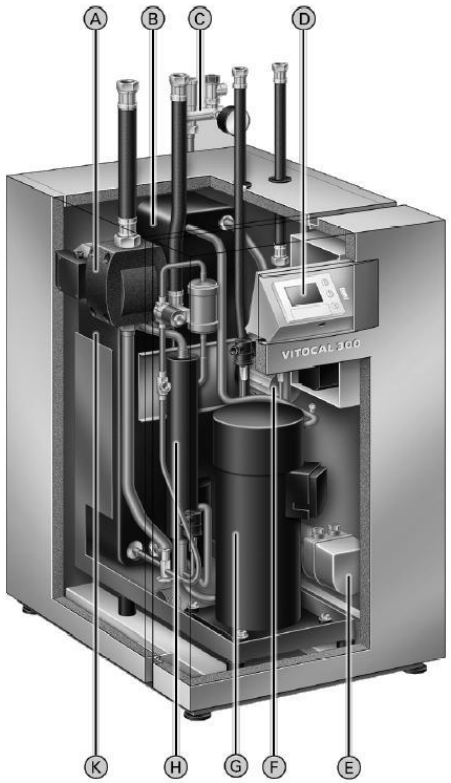

Ⓐ Circulateur circuit eau glycolée
Ⓑ Condenseur (calorifugé)
Ⓒ Petit collecteur avec groupe de sécurité
Ⓓ Régulation pompe à chaleur numérique en fonction de la température extérieure CD 70
Ⓔ Chauffage d'appoint électrique
Ⓕ Circulateur circuit de chauffage
Ⓖ Compresseur Compliant Scroll entièrement hermétique
Ⓗ Echangeur de chaleur supplémentaire
Ⓚ Evaporateur (calorifugé)

Example refrigeration machines

Condensing units and evaporators

- The condensing comprises:
  - The compressor
  - The condenser
  - The expansion valve
- It is installed outside
- The evaporator is installed inside and connected to the condensing unit

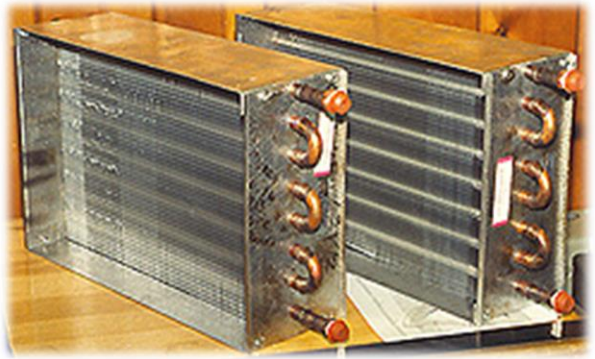

Example refrigeration machines

Chiller for the production of cold water

KU LEUVEN

Example refrigeration machines

Domestic fridge

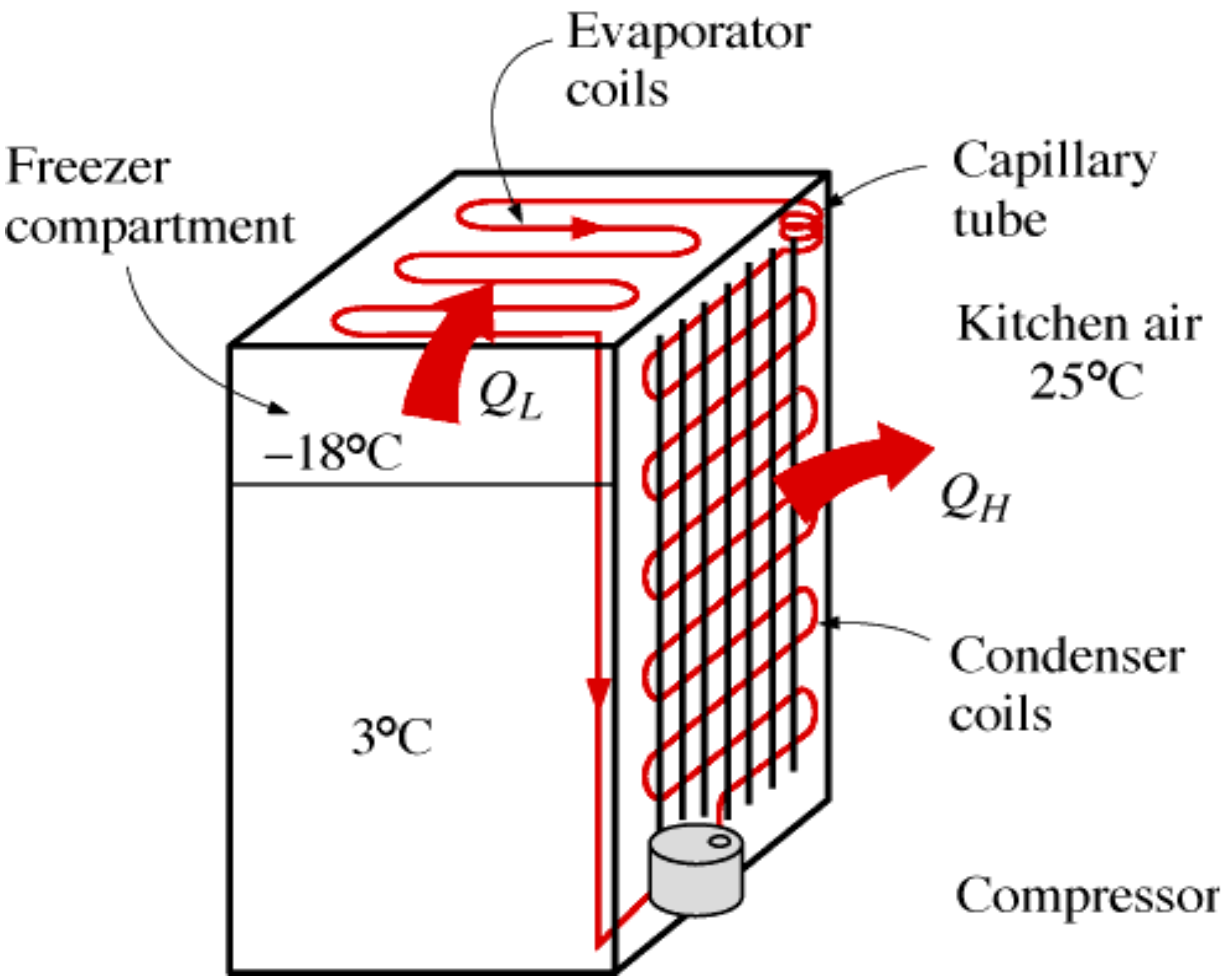

Exercises in EES

11–11 A commercial refrigerator with refrigerant-134a as the working fluid is used to keep the refrigerated space at −30°C by rejecting its waste heat to cooling water that enters the condenser at 18°C at a rate of 0.25 kg/s and leaves at 26°C. The refrigerant enters the condenser at 1.2 MPa and 65°C and leaves at 42°C. The inlet state of the compressor is 60 kPa and −34°C and the compressor is estimated to gain a net heat of 450 W from the surroundings. Determine (*a*) the quality of the refrigerant at the evaporator inlet, (*b*) the refrigeration load, (*c*) the COP of the refrigerator, and (*d*) the theoretical maximum refrigeration load for the same power input to the compressor.

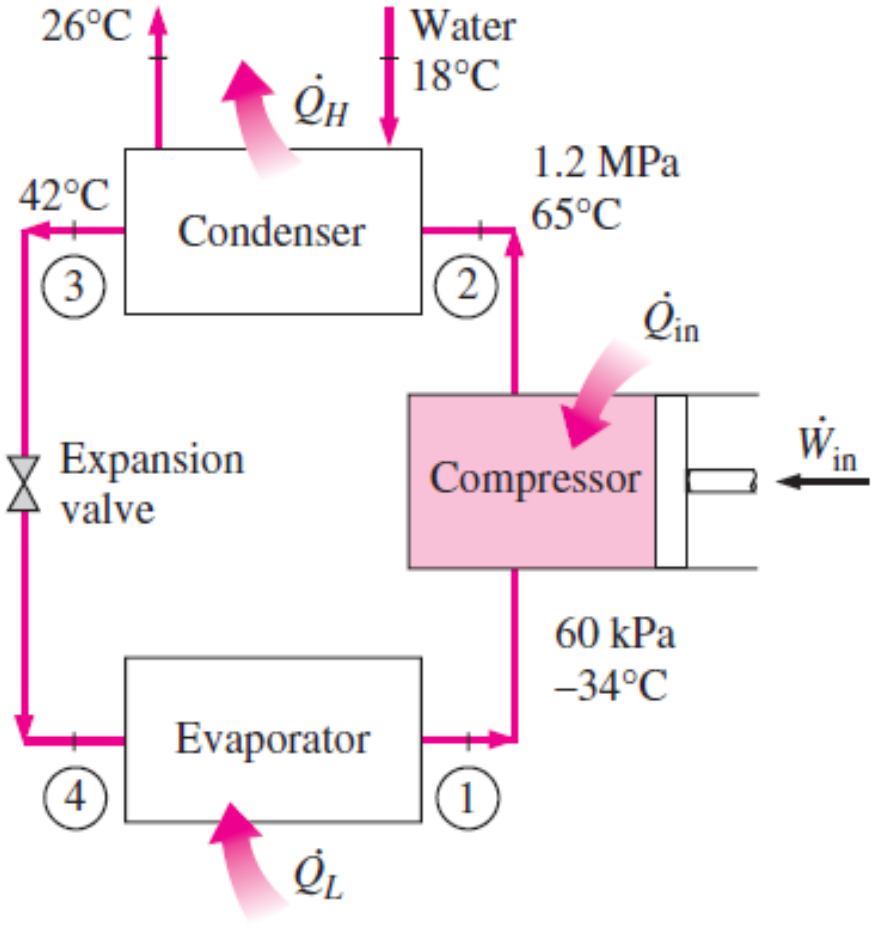

Adapted from: Y.A. Cengel, M. A. Boles, Thermodynamics – An Engineering Approach (5th Edition)

KU LEUVEN