KU LEUVEN

B-KUL-Z55337
Applied Thermodynamics

Sylvain Quoilin

Adapted from: Y.A. Cengel, M. A. Boles, Thermodynamics – An Engineering Approach (5th Edition)

Chapter 5

Energy Analysis of Open Systems

Introduction

$$E_{in} - E_{out} = \underbrace{(Q_{in} - Q_{out})}_{\text{= 0 if adiabatic}} + \underbrace{(W_{in} - W_{out})}_{\text{= 0 if no work transfer}} + \underbrace{\left(E_{mass,in} - E_{mass,out}\right)}_{\text{= 0 if closed system}} = \Delta E_{system}$$

$$W = W_b + W_{other}$$

Energy balance

Reminder:

$$E_{in} - E_{out} = \underbrace{(Q_{in} - Q_{out})}_{\text{= 0 if adiabatic}} + \underbrace{(W_{in} - W_{out})}_{\text{= 0 if no work transfer}} + \underbrace{(E_{mass,in} - E_{mass,out})}_{\text{= 0 if closed system}} = \Delta E_{system}$$

$$\dot{E}_{in} - \dot{E}_{out} = \underbrace{(\dot{Q}_{in} - \dot{Q}_{out})}_{\text{= 0 if adiabatic}} + \underbrace{(\dot{W}_{in} - \dot{W}_{out})}_{\text{= 0 if no work transfer}} + (\dot{E}_{mass,in} - \dot{E}_{mass,out}) = \frac{dE_{system}}{dt}$$

Mass conservation

Volume and mass flow rates

- In a closed system, mass conservation implies that the mass is constant
- Mass flow rate $\neq$ Volume flow rate !!
- Example: in a pipe, the mass flow rate if obtained by integration over the whole cross section:

$$\dot{m} = \int_{A_c} \delta\, \dot{m} = \int_{A_c} \rho V_n dA_c \quad \left(\frac{kg}{s}\right)$$

- It is also possible to define an average speed (the speed is not uniform and is zero close to the wall

$$V_{avg} = \frac{1}{A_c}\int_{A_c} V_n dA_c \quad \left(\frac{m}{s}\right)$$

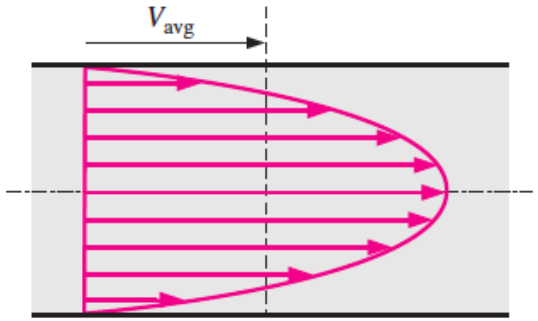

Mass conservation

Volume and mass flow rates

For incompressible flows, or compressible flows with a constant density throughout the cross section, the **mass flow rate** can be computed by:

$$\dot{m} = \rho V_{avg} A_c \quad \left(\frac{kg}{s}\right)$$

- The **volume flow rate** through the cross-section is given by:

$$\dot{V} = \int_{A_c} V_n dA_c = V_{avg} A_c = V\, A_c \quad \left(\frac{m^3}{s}\right)$$

- The mass and volume flow rates are thus linked by:

$$\dot{m} = \rho \dot{V} = \frac{V}{v}$$

The mass conservation principle

- The principle of mass conservation (or « mass balance ») specifies that for a control volume (i.e. open system): the amount of mass entering or leaving the control volume during a time interval *Δt is equal to the variation of the total mass within this volume during the Δt interval*

$$m_{in} - m_{out} = \Delta m_{CV}$$

- In its *rate form*::

$$\dot{m}_{in} - \dot{m}_{out} = \frac{dm_{CV}}{dt}$$

- This equation can be extended to the case in which several flow enter/leave the system:

$$\sum_{in} \dot{m} - \sum_{out} \dot{m} = \frac{dm_{CV}}{dt}$$

The mass conservation principle

Mass balance for a steady-flow process

- In a steady-flow process, the amount of mass within the volume is constant. As a consequence, the total mass entering the system must be equal to the total mass leaving the system. The sum of entering flow rates is equal to the sum of leaving flow rates:

$$\sum_{in} \dot{m} - \sum_{out} \dot{m} = \frac{dm_{CV}}{dt} = 0$$

$$\Leftrightarrow \sum_{in} \dot{m} = \sum_{out} \dot{m}$$

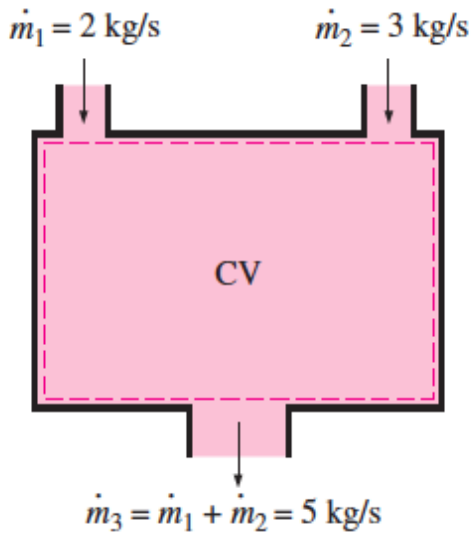

- In the particular case of an incompressible flow::

$$\sum_{su} \dot{V} = \sum_{ex} \dot{V}$$

- And if there is on single entering/leaving flow:

$$\dot{V}_1 = \dot{V}_2 \rightarrow V_1 A_1 = V_2 A_2$$

Flow work and the energy of a flowing fluid

- A work is required to push the fluid in or extract the fluid from the control volume
- This work is called **flow work**
- We consider a fluid element with a volume V. This element is forced into the control volume under the action of the fluid upstream (playing the role of a piston)
- The force applied by this imaginary piston is given by:

$$F = P.A$$

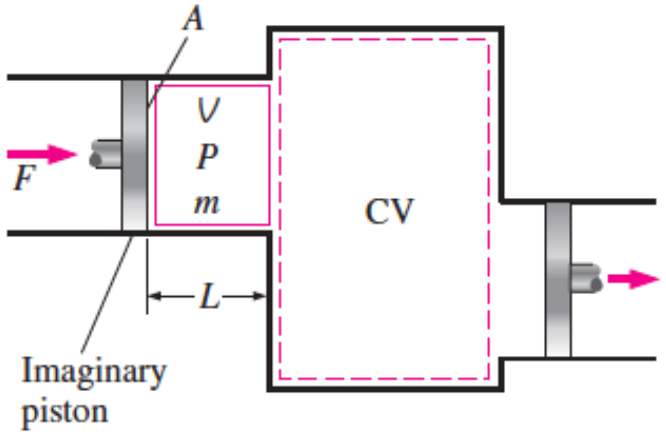

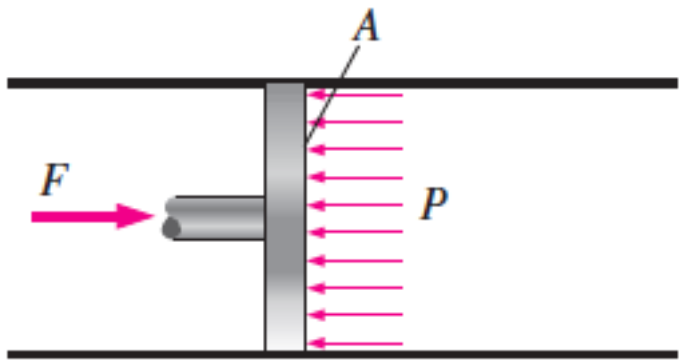

Flow work and the energy of a flowing fluid

- The force is applied over a distance L. The work provided to push the fluid inside the control volume (**flow work**) is thus given by:

$$W_{flow} = FL = PAL = PV \quad (J)$$

- And in its specific form::

$$w_{flow} = Pv \quad (J/kg)$$

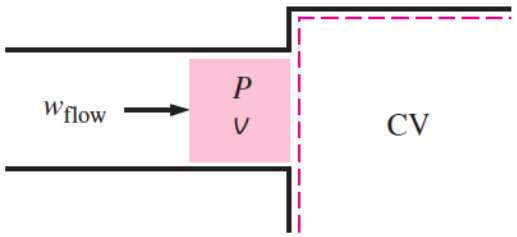

(*a*) Before entering

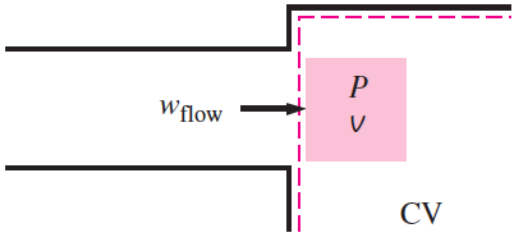

(*b*) After entering

Flow work

Total energy of a flow

- As a reminder, the total energy of a system is given by the sum of its internal, kinetic adn potential energy:

$$e = u + ke + kp = u + \frac{V^2}{2} + gz \quad \left(\frac{J}{kg}\right)$$

- The fluid entering a control volume contains an additional form of energy: the flow work. The **total flow energy** is thus given by:

$$\theta = u + pv + ke + kp = h + \frac{V^2}{2} + gz \quad \left(\frac{J}{kg}\right)$$

- The energy required to introduce or extract the mass of fluid is automaticaaly accounted for by the term **« enthalpy »** h.

Flow work

Energy transport by the flow

- The total flow energy of a mass m is given by:

$$E_{mass} = m\theta = m\left(h + \frac{V^2}{2} + gz\right) \quad (J)$$

- In its temporal form, the energy rate (total flow power) is given by:

$$\dot{E}_{mass} = \dot{m}\theta = \dot{m}\left(h + \frac{V^2}{2} + gz\right) \quad (W)$$

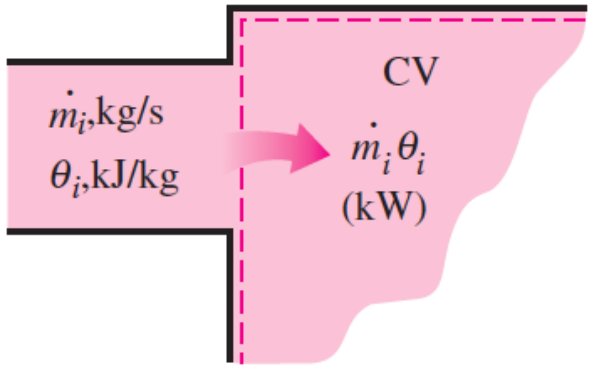

Energy analysis of a steady-flow system

- In engineering, many systems operate in steady conditions after a certain time (steady-state or steady-flow process). It is the case for compressors, turbines, heat exchangers, etc. which would be operated without interruption.
- In this case, we have a **steady-flow process**
- In such a process, no intensive or extensive property varies in time inside the control volume => masse *m*, volume *V* and total energy *E* of the control volume are constrained
- In steady-state, the mass entering is equal to the mass leaving (<u>mass balance</u>)

$$\sum_{in} \dot{m} = \sum_{out} \dot{m}$$

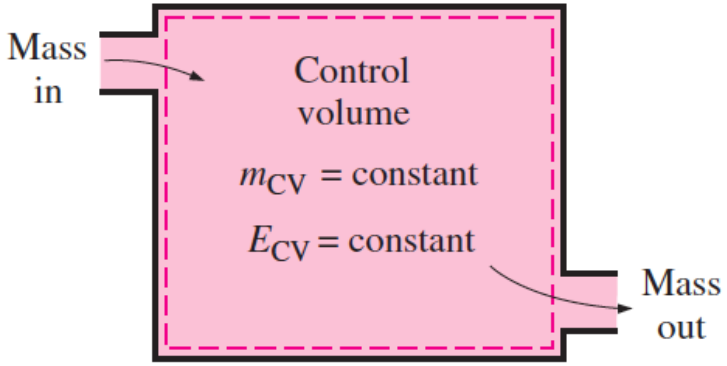

Energy analysis of a steady-flow system

- In steady-state, the energy content of the control vollume is constant in time:

$$\dot{E}_{in} - \dot{E}_{out} = \frac{dE_{CV}}{dt} = 0$$

- Since energy can be transferred in the form of work, heat or mass, the energy balance equation can be written in the following form::

$$\dot{Q}_{in} + \dot{W}_{in} + \underbrace{\sum_{in} \dot{m}\left(h + \frac{V^2}{2} + gz\right)}_{\text{For each inflow}} = \dot{Q}_{out} + \dot{W}_{out} + \underbrace{\sum_{out} \dot{m}\left(h + \frac{V^2}{2} + gz\right)}_{\text{For each outflow}}$$

Energy analysis of a steady-flow system

- Example of an electrical boiler:

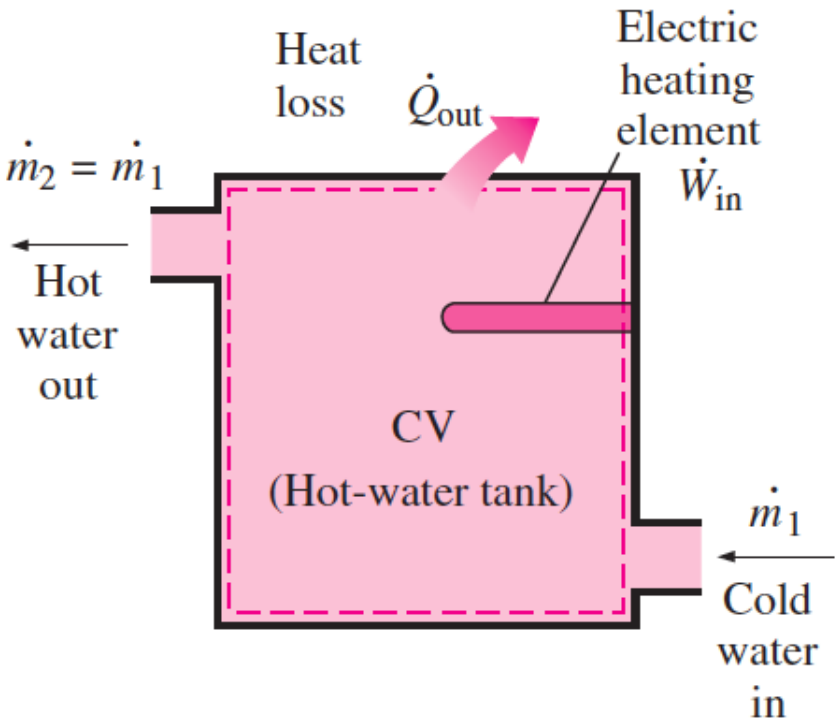

Energy analysis of a steady-flow system

- The first law of thermodynamics for an open system is thus given by:

$$\dot{Q} - \dot{W} = \underbrace{\sum_{out} \dot{m}\left(h + \frac{V^2}{2} + gz\right)}_{\text{For each outflow}} - \underbrace{\sum_{in} \dot{m}\left(h + \frac{V^2}{2} + gz\right)}_{\text{For each inflow}}$$

Mechanical power produced by the system

Thermal power provided to the system

- If there is only one flow through the system:

$$\dot{Q} - \dot{W} = \dot{m}\left(h_2 - h_1 + \frac{V_2^2 - V_1^2}{2} + g(z_2 - z_1)\right)$$

Energy analysis of a steady-flow system

- For an open system in steady-state (or steady-flow), the boundary work is zero since the volume of the system is constant in time. The flow work is taken into account in the enthalpy. As a consequence, the only forms of work that can be exchanged are electrical work and shaft work:

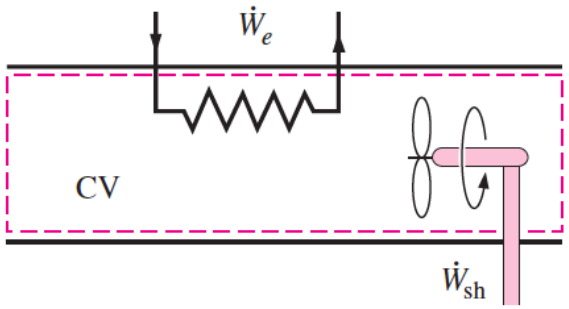

- If kinetic and potential energy do no vary in time, and if we express the properties in their specific form, the energy balance for an **open system** becomes:

$$q - w = h_2 - h_1$$

- Whereas for a **closed system** we had (cf chapter 4):

$$q - w = u_2 - u_1$$

Examples of steady-flow components

Nozzles and diffusers

- A **nozzle** is a componants that increases the kinetic energy of a fluid by decreasing the pressure
- A **diffuser** is a component that increases the pressure of a fluid by decreasing its speed
- Heat transfer = 0
- Work = 0
- Variation of potential energy: Δpe= 0
- Variation of kinetic energy: Δke ≠ 0

$$0 = \dot{m}\left(h_2 - h_1 + \frac{V_2^2 - V_1^2}{2}\right)$$

$$\Leftrightarrow h_2 + \frac{V_2^2}{2} = h_1 + \frac{V_1^2}{2}$$

Examples of steady-flow components

Nozzles and diffusers

- Examples:

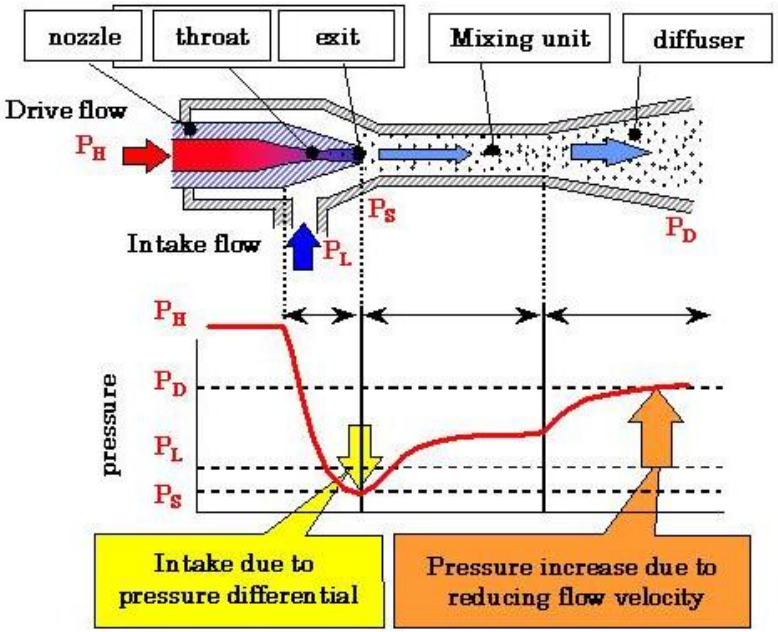

Ejector

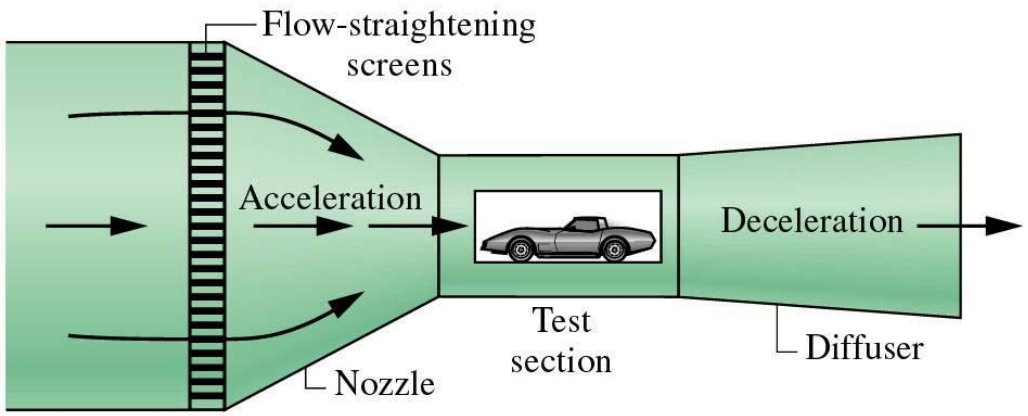

Examples of steady-flow components

Nozzles and diffusers

- <u>Example 5-4</u>: Air at 10°C and 80 kPa enters the diffuser of a jet engine steadily with a velocity of 200 m/s. The inlet area of the diffuser is 0.4 m² . The air leaves the diffuser with a velocity that is very small compared with the inlet velocity. Determine (a) the mass flow rate of the air and (b) the temperature of the air leaving the diffuser.

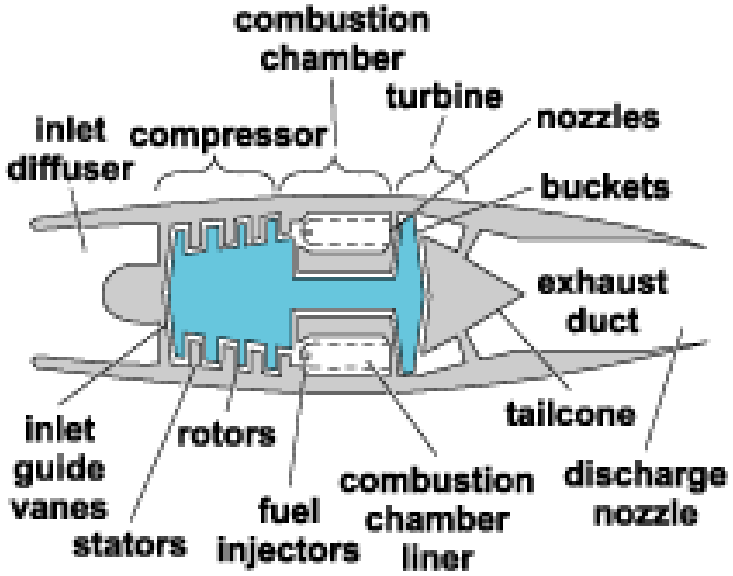

Examples of steady-flow components

Turbines and compressors

- A **turbine** produces mechanical work (shaft work). They can be used in different applications: steam turbine, gas turbine, hydraulic turbine
- **Compressors, pumps and fans** are used to increase the pressure of a fluid. Work is provided to the component through the rotating shaft.
  - A pump increases the pressure of a liquid
  - A fan slightly increases the pressure of a gas (to displace it)
  - A compressor significantly increases the pressure of a gas
- Compressors, pumps, fans and turbines can exhange heat with the surrounding or not (example: compressor with cooling fins)
- The variation of potential energy is negligible
- The variation of kinetic energy is negligible, except in the case of turbines and turbocompressors.

Examples of steady-flow components

Turbines and compressors

- <u>Example 5-6: Air compressor</u>

Air at 100 kPa and 280 K is compressed steadily to 600 kPa and 400 K. The mass flow rate of the air is 0.02 kg/s, and a heat loss of 16 kJ/kg occurs during the process. Assuming the changes in kinetic and potential energies are negligible, determine the necessary power input to the compressor.

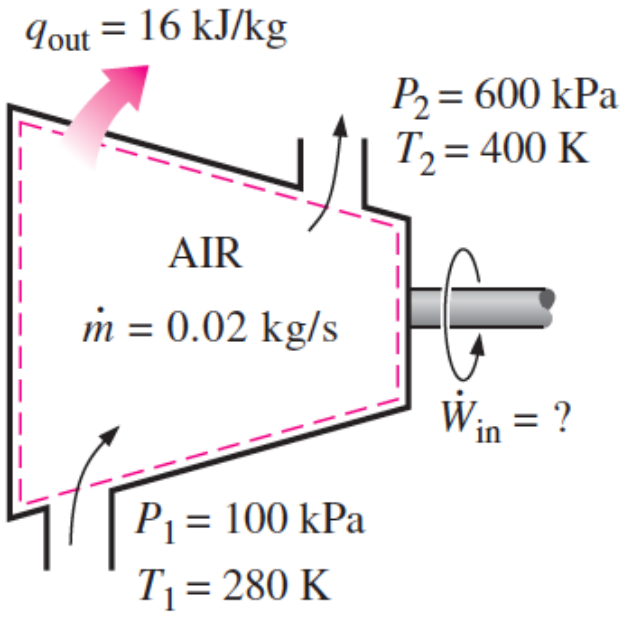

$$\dot{E}_{in} = \dot{E}_{out}$$
$$\Leftrightarrow \dot{W}_{in} + \dot{m}.h_1 = \dot{Q}_{out} + \dot{m}.h_2$$

Examples of steady-flow components

Turbines and compressors

Rolling piston compressor

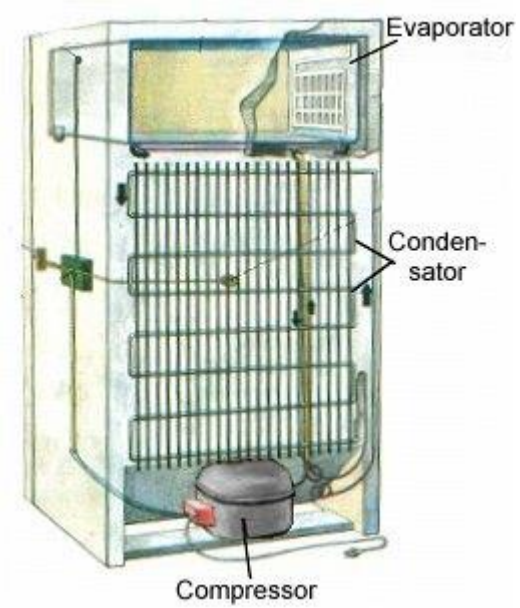

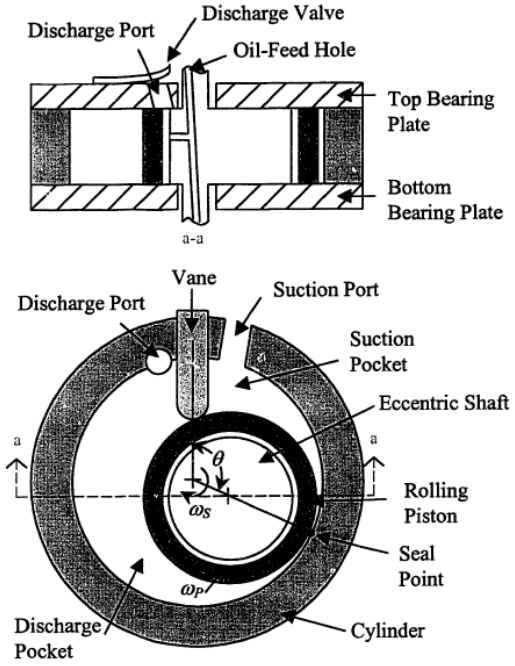

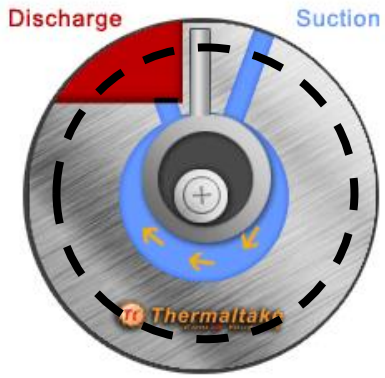

Examples of steady-flow components

Turbines and compressors

Scroll compressor

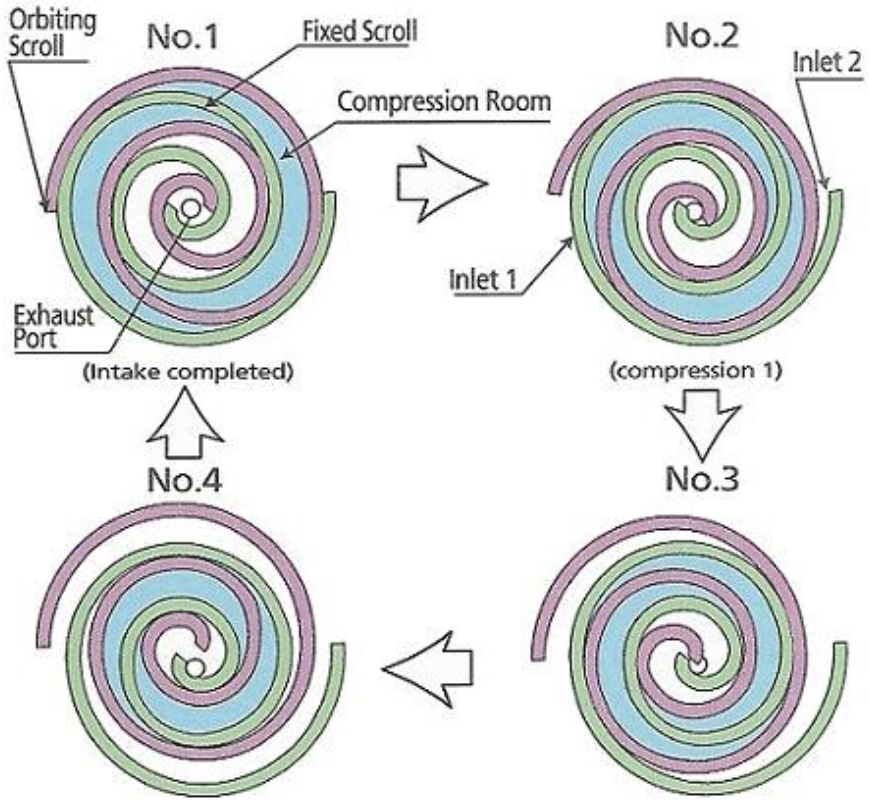

Examples of steady-flow components

Turbines and compressors

- <u>Example 5-7: Steam turbine</u>

The power output of an adiabatic steam turbine is 5 MW, and the inlet and the exit conditions of the steam are as indicated in the figure below. (a) Compare the magnitudes of Δh, Δke, Δpe. (b) Determine the work done per unit mass of the steam flowing through the turbine. (c) Calculate the mass flow rate of the steam.

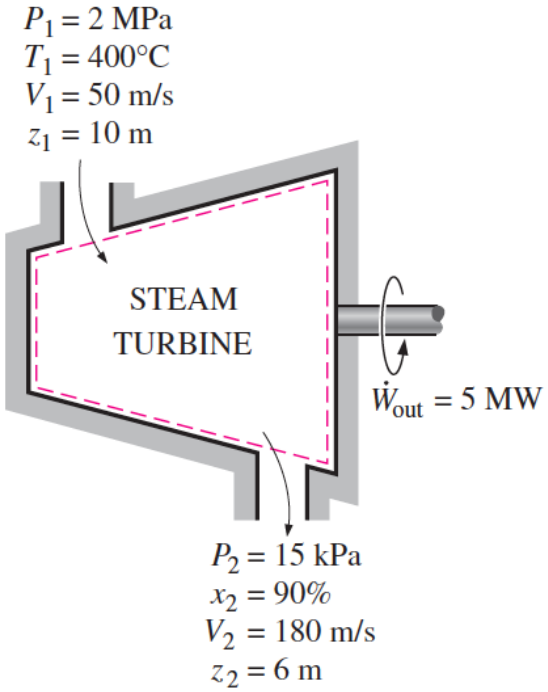

$$\dot{E}_{in} = \dot{E}_{out}$$

$$\Leftrightarrow \dot{m}\left(h_1 + \frac{V_1^2}{2} + gz_1\right) = \dot{W}_{out} + \dot{m}\left(h_2 + \frac{V_2^2}{2} + gz_2\right)$$

Examples of steady-flow components

Throttling valve

- Throttling valves are any kind of flow-restricting devices that cause a significant pressure drop in the fluid (examples: regular valves, capillary tubes)
- They don't produce any work
- Considered the small size of the throttling orifice, the valve can be considered adiabatic.

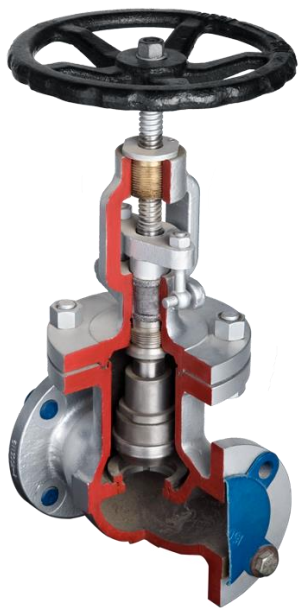

$$\dot{E}_{in} = \dot{E}_{out}$$
$$\Leftrightarrow h_1 = h_2$$

- <u>Example 5-8: Expansion of refrigerant R134a in a refrigerator</u>

Refrigerant-134a enters the capillary tube of a refrigerator as saturated liquid at 0.8 MPa and is throttled to a pressure of 0.12 MPa. Determine the quality of the refrigerant at the final state and the temperature drop during this process.

Examples of steady-flow components

Mixing chamber

- A mixing chamber consists of a volume within which 2 (or more) fluids are mixed. It can for example be a « T-connection »
  - Mixing chamber are usually well insulated or present a low heat loss area: q=0
  - No work is produced (w=0)
  - Variation of kinetic and potential energy are negligible (Δke=Δpe=0).

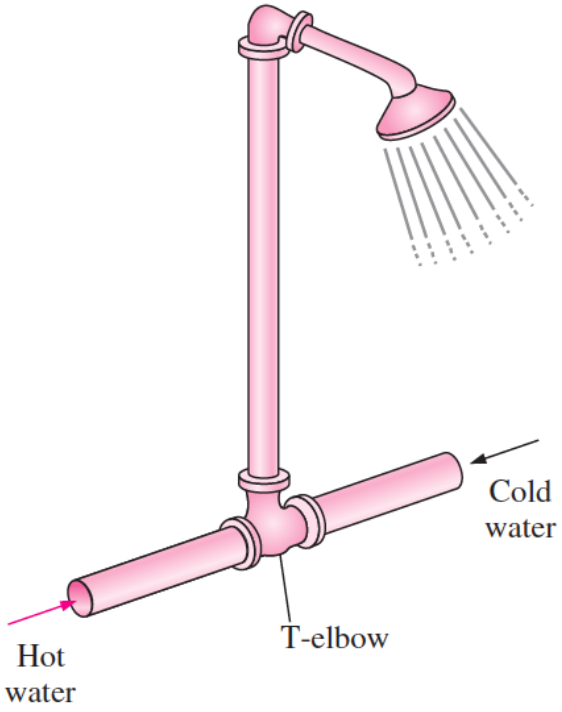

Examples of steady-flow components

Mixing chamber

- <u>Example 5-9: Mixing of hot and cold water in a shower</u>

Consider an ordinary shower where hot water at 140°F is mixed with cold water at 50°F. If it is desired that a steady stream of warm water at 110°F be supplied, determine the ratio of the mass flow rates of the hot to cold water. Assume the heat losses from the mixing chamber to be negligible and the mixing to take place at a pressure of 20 psia.

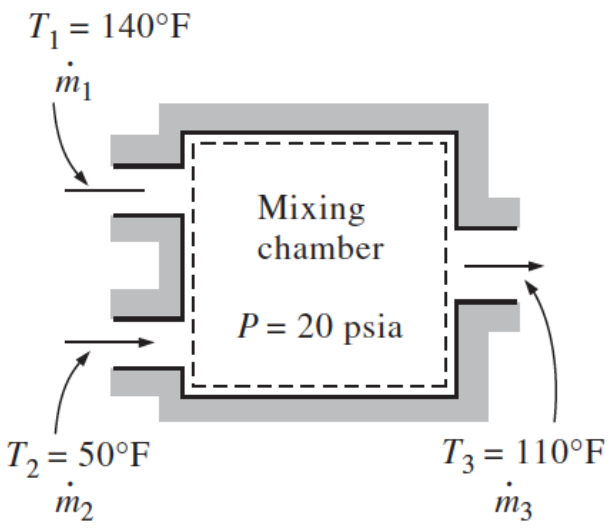

Mass conservation

$$\dot{m}_{in} = \dot{m}_{out}$$
$$\Leftrightarrow \dot{m}_1 + \dot{m}_2 = \dot{m}_3$$

Energy conservation

$$\dot{E}_{in} = \dot{E}_{out}$$
$$\Leftrightarrow \dot{m}_1 h_1 + \dot{m}_2 h_2 = \dot{m}_3 h_3$$

Examples of steady-flow components

Heat exchangers

- A heat exchanger is a device in which two fluids exchange heat without mixing with one another
  - ❖ No work is produced (w=0)
  - ❖ Variation of kinetic and potential energy is negligible (Δke=Δpe=0).

- <u>Example 5-10: Cooling refrigerant R134a with water</u>

Refrigerant-134a is to be cooled by water in a condenser. The refrigerant enters the condenser with a mass flow rate of 6 kg/min at 1 MPa and 70°C and leaves at 35°C. The cooling water enters at 300 kPa and 15°C and leaves at 25°C. Neglecting any pressure drops, determine (a) the mass flow rate of the cooling water required and (b) the heat transfer rate from the refrigerant to water.

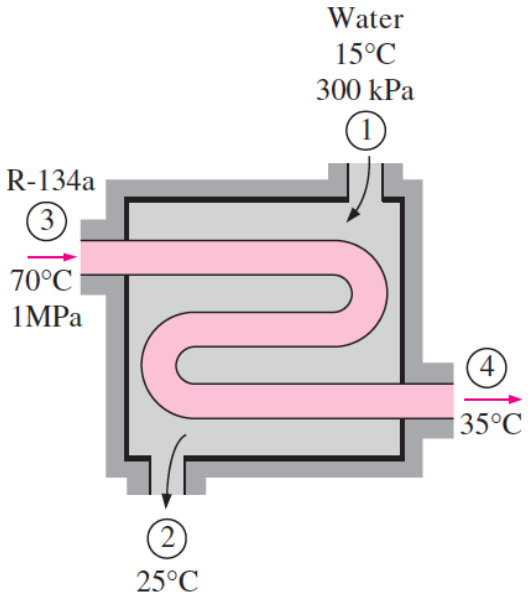

Examples of steady-flow components

Heat exchangers

System 1 = whole heat exchanger

- *Mass conservation:*

$$\dot{m}_{in} = \dot{m}_{out}$$
$$\Leftrightarrow \dot{m}_1 = \dot{m}_2 = \dot{m}_w \; et \; \dot{m}_3 = \dot{m}_4 = \dot{m}_R$$

- *Energy conservation:*

$$\dot{E}_{in} = \dot{E}_{out}$$
$$\Leftrightarrow \dot{m}_1 h_1 + \dot{m}_3 h_3 = \dot{m}_2 h_2 + \dot{m}_4 h_4$$
$$\Leftrightarrow \dot{m}_w (h_1 - h_2) = \dot{m}_R (h_4 - h_3)$$

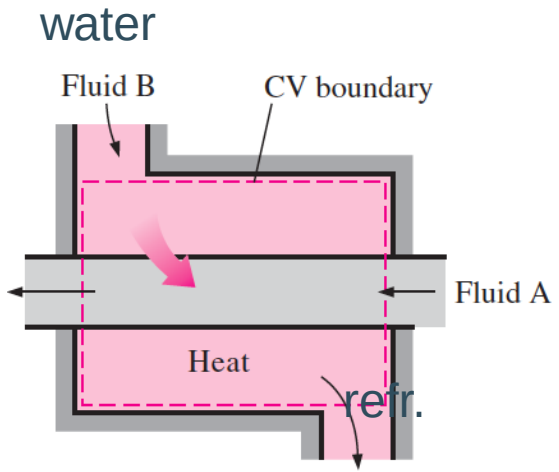

System 2 = One of the fluids (for example: the fluid A side)

- *Energy conservation:*

$$\dot{E}_{in} = \dot{E}_{out}$$
$$\Leftrightarrow \dot{m}_1 h_1 + \dot{Q}_{w,in} = \dot{m}_2 h_2$$
$$\Leftrightarrow \dot{m}_w (h_1 - h_2) = \dot{Q}_{w,in}$$

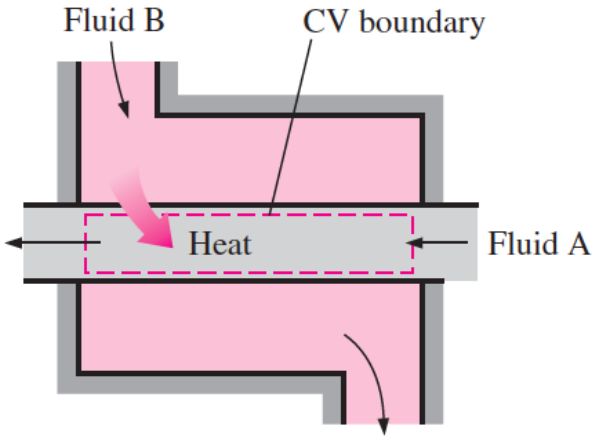

Examples of steady-flow components

Plate heat exchangers

Plate heat exchangers

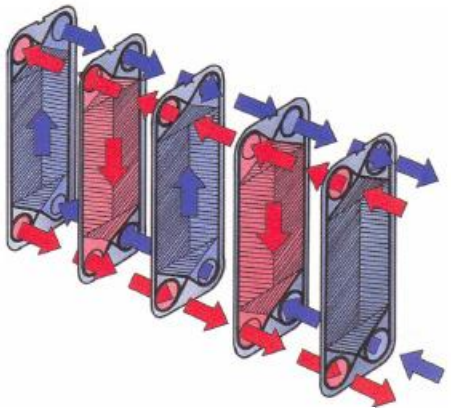

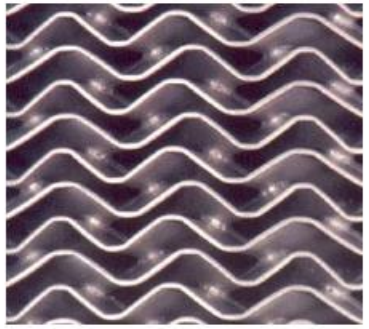

- Different types:
  - Stacked plates gasketed together
  - Brazed (or welded) plates
- Low fluid charge: good for refrigerants!
- Important heat transfer coefficients but pressure drop can be high!

Examples of steady-flow components

Tube-in-tube heat exchangers

Tube-intube heat exchangers

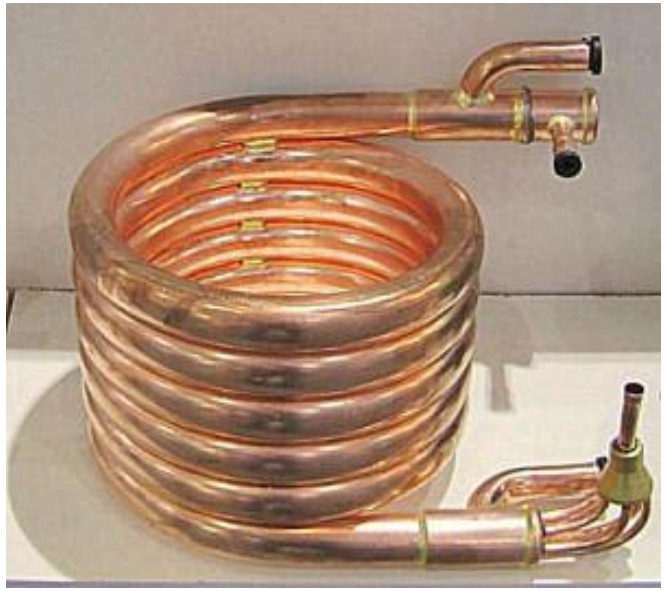

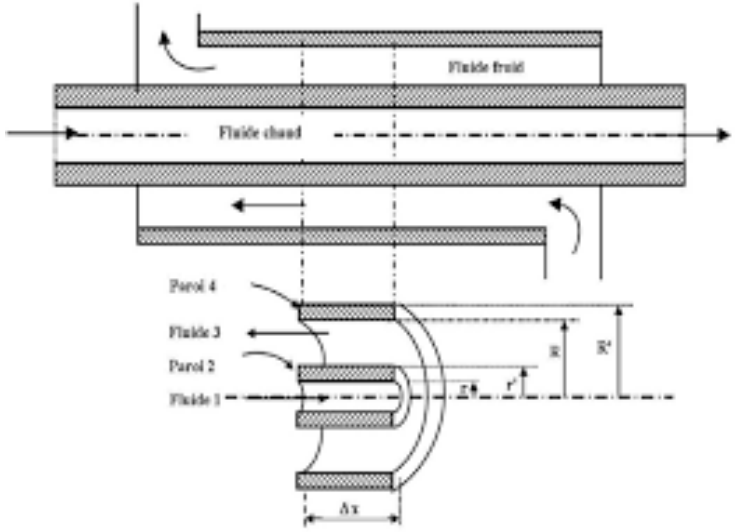

The inside tube can be finned to increase the heat transfer

Examples of steady-flow components

Heat exchangers

Shell and tube heat exchangers

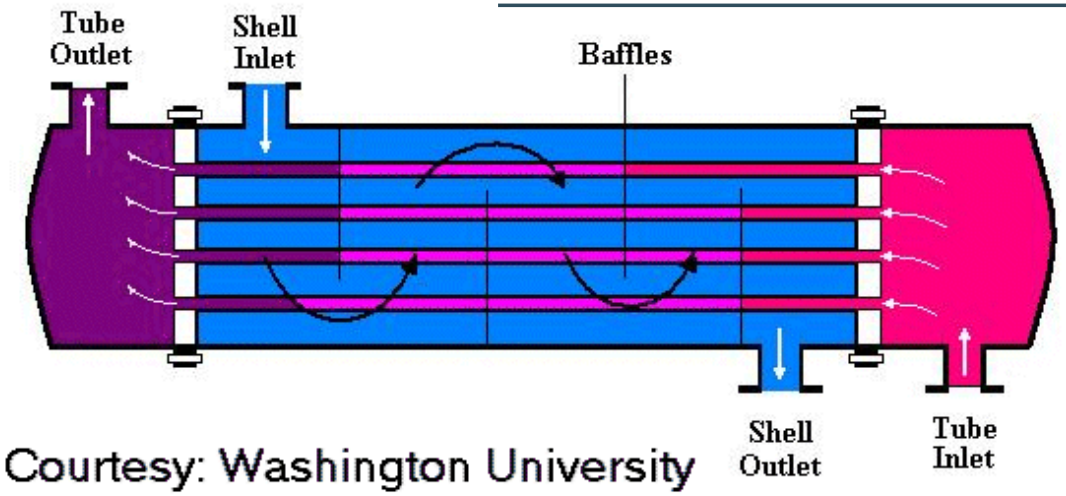

Courtesy: Washington University

Fin and tube heat exchangers

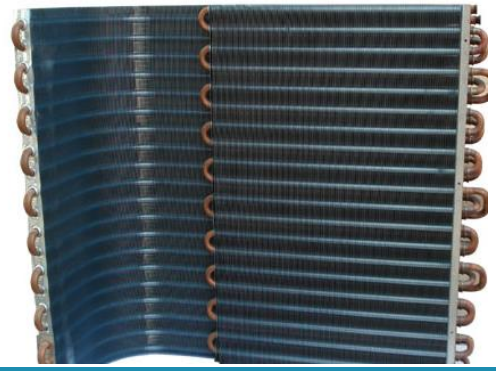

Examples of steady-flow components

Ducts and piping

Example 5-11: Electrical heating of air

The electric heating systems used in many houses consist of a simple duct with resistance heaters. Air is heated as it flows over resistance wires. Consider a 15-kW electric heating system. Air enters the heating section at 100 kPa and 17°C with a volume flow rate of 150 m 3 /min. If heat is lost from the air in the duct to the surroundings at a rate of 200 W, determine the exit temperature of air.

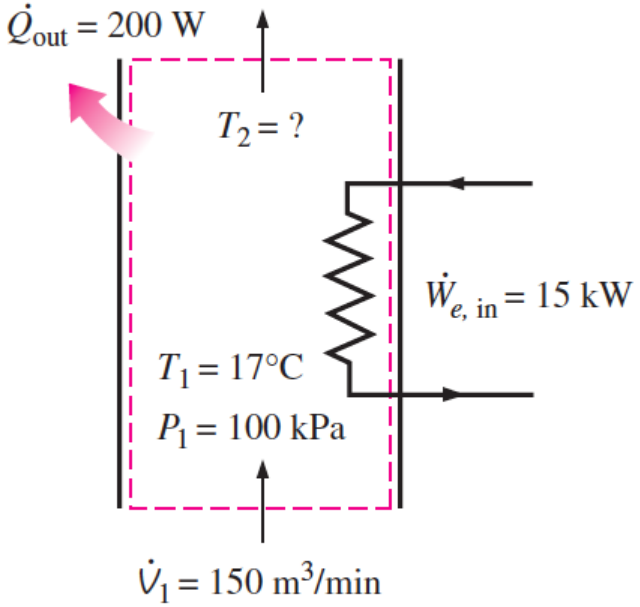

$$\dot{E}_{in} = \dot{E}_{out}$$

$$\Leftrightarrow \dot{W}_{e,in} + \dot{m}_1 h_1 = \dot{Q}_{out} + \dot{m}_2 h_2$$

Energy analysis of unsteady-flow processes

- In steady-flow, we had:

$$\left(\frac{dm}{dt}\right)_{system} = \left(\frac{dE}{dt}\right)_{system} = 0$$

- In an unsteady-flow (also known as « transient ») process, it is:

$$\dot{Q} - \dot{W} + \sum_{in} \dot{m}\left(h + \frac{V^2}{2} + gz\right) - \sum_{out} \dot{m}\left(h + \frac{V^2}{2} + gz\right) = \left(\frac{d(me)}{dt}\right)_{system}$$

Energy analysis of unsteady-flow processes

- If the variations of kinetic and potential energy are neglected, we have:

$$\dot{Q} - \dot{W} + \sum_{in} \dot{m}\, h - \sum_{out} \dot{m}\, h = \left(\frac{d(m\, u)}{dt}\right)_{system}$$

- This is the base equation for the dynamic modeling of thermal systems, which is out of the scope of this class.

Exercises in EES

5–12 A desktop computer is to be cooled by a fan whose flow rate is 0.34 m^3/min. Determine the mass flow rate of air through the fan at an elevation of 3400 m where the air density is 0.7 kg/m^3. Also, if the average velocity of air is not to exceed 110 m/min, determine the diameter of the casing of the fan. *Answers:* 0.238 kg/min, 0.063 m

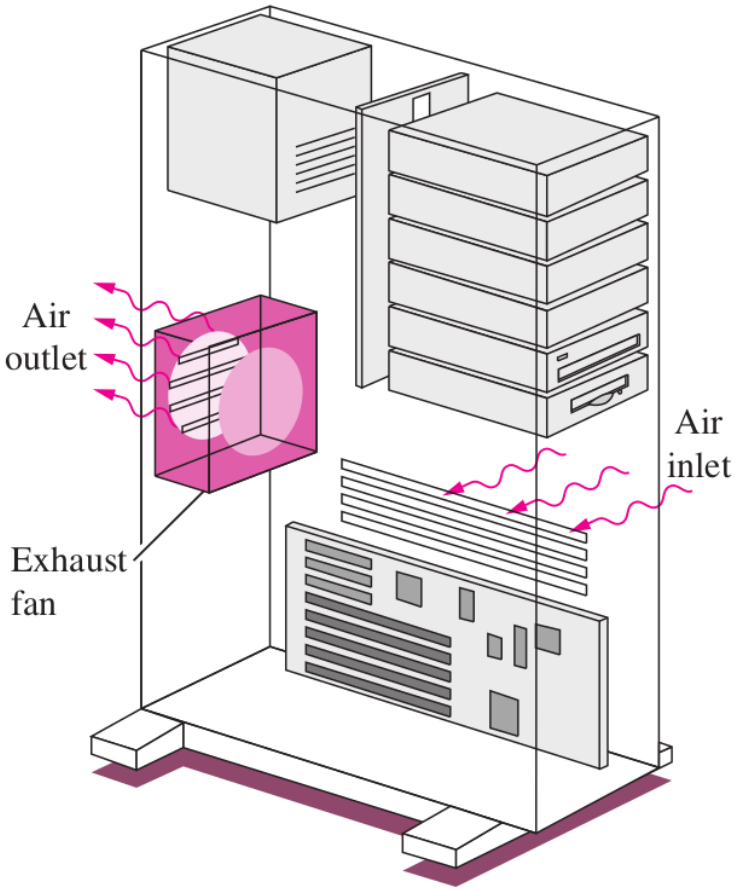

Exercises in EES

5–75 A hot-water stream at 80°C enters a mixing chamber with a mass flow rate of 0.5 kg/s where it is mixed with a stream of cold water at 20°C. If it is desired that the mixture leave the chamber at 42°C, determine the mass flow rate of the cold-water stream. Assume all the streams are at a pressure of 250 kPa. *Answer:* 0.865 kg/s

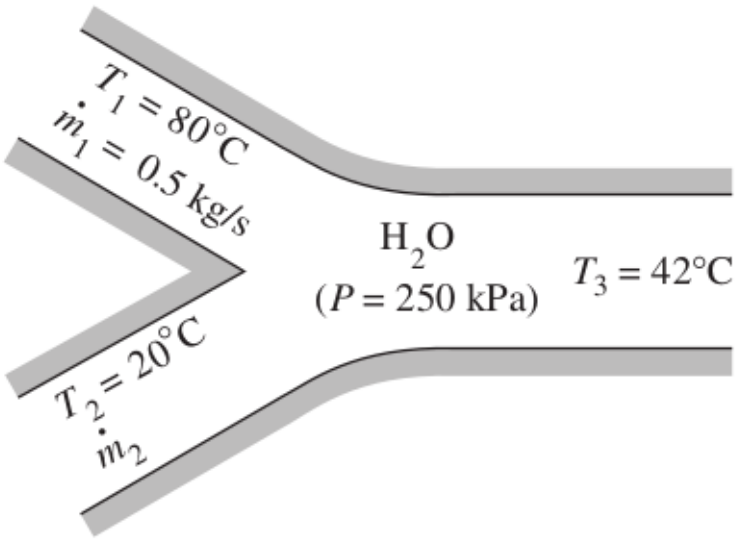

Exercises in EES
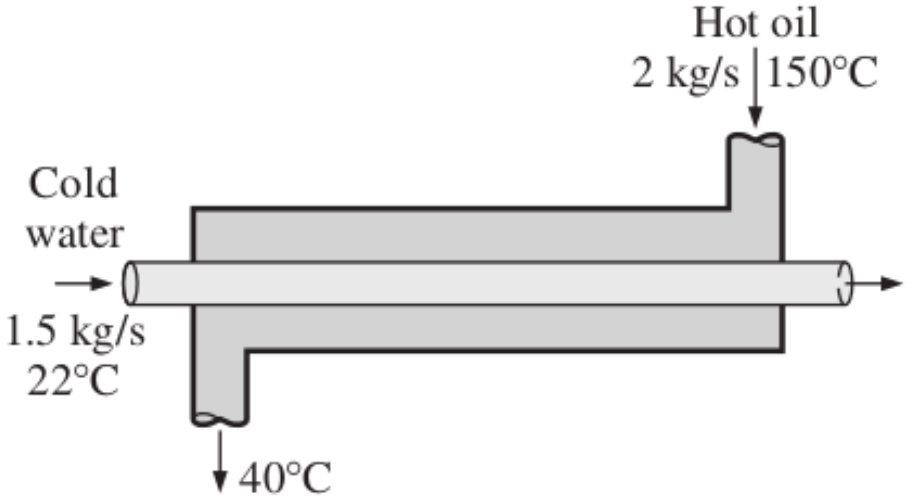
5–91 A thin-walled double-pipe counter-flow heat exchanger is used to cool oil (c_p = 2.20 kJ/kg · °C) from 150 to 40°C at a rate of 2 kg/s by water (c_p = 4.18 kJ/kg · °C) that enters at 22°C at a rate of 1.5 kg/s. Determine the rate of heat transfer in the heat exchanger and the exit temperature of water.